FMB Oxford MX beamlines at the Australian Synchrotron

Julian Adams, Development Manager

FMB Oxford

Trypsin data standard	PX1	PX2
R_{merge} (%)	4.9 (8.8)	4.2 (11.2)
Completeness (%)	99.8 (99.8)	98.4 (90.5)
Resolution Å	1.4	1.0
$I/_{sig}I$	22.9 (12.8)	20.1 (7.2)
Fractional bias	-0.012	-0.002

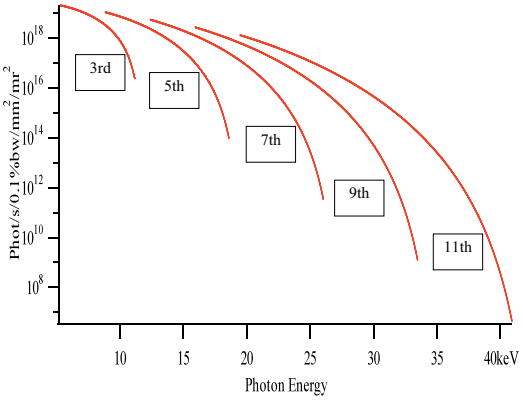

Tuning Curves for an in vacuum 22mm, 135 period, 6.6 mm gap undulator with 0.76 T max field. Harmonics to 3 to 11 are shown.

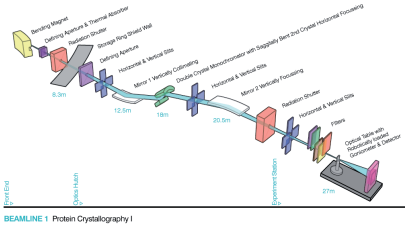

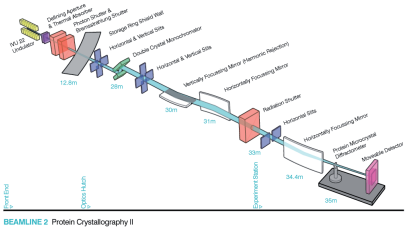

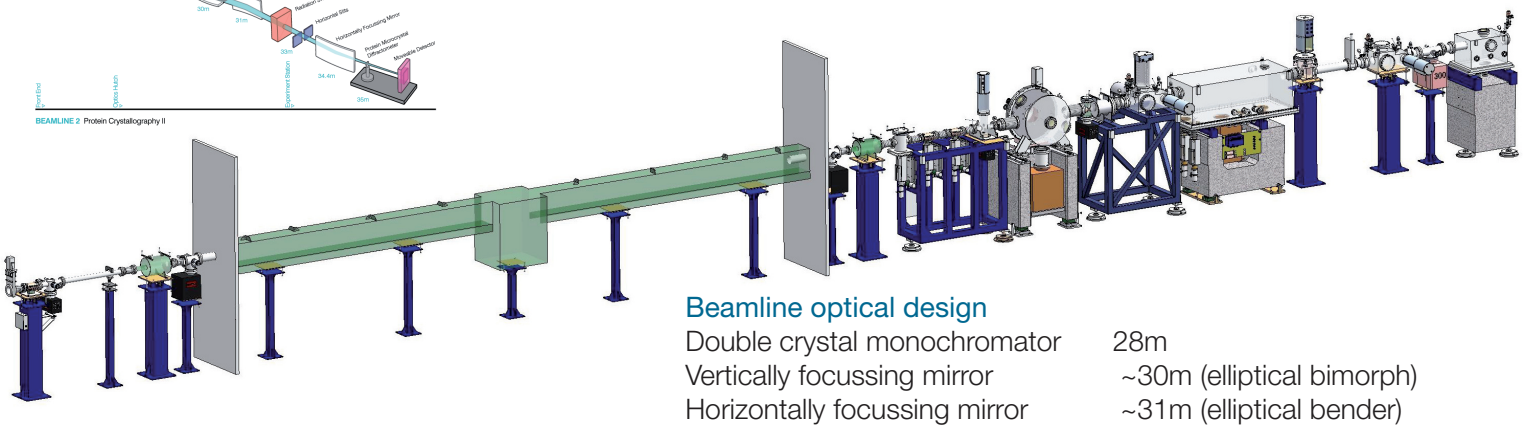

Beamline optical design

Double crystal monochromator	28m
Vertically focussing mirror	~30m (elliptical bimorph)
Horizontally focussing mirror	~31m (elliptical bender)
Horizontally focussing mirror2	~34.4m (elliptical bimorph)
Focus position	35m

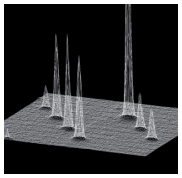

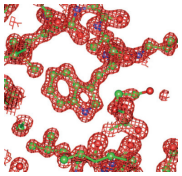

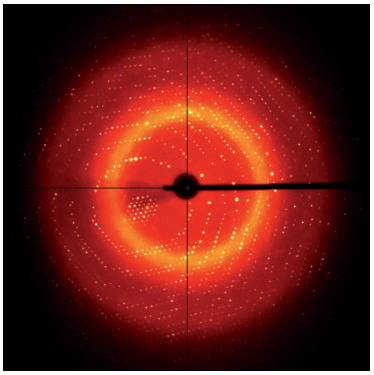

Performance	PX1	PX2
Energy range	5 keV - 19keV	5.5 keV - 28 keV
Beam focus size at sample	130 µm x 110 µm (HxV) (FWHM)	10 µm x 20 µm (HxV) (FWHM)
Stability	5µm RMS position stability over 2h	1 µm RMS position stability over 2h
Flux at the sample	2 x 10^{11} ph/s in 100 µm x 100 µm	4 x 10^{12} ph/s in 10 µm x 20 µm

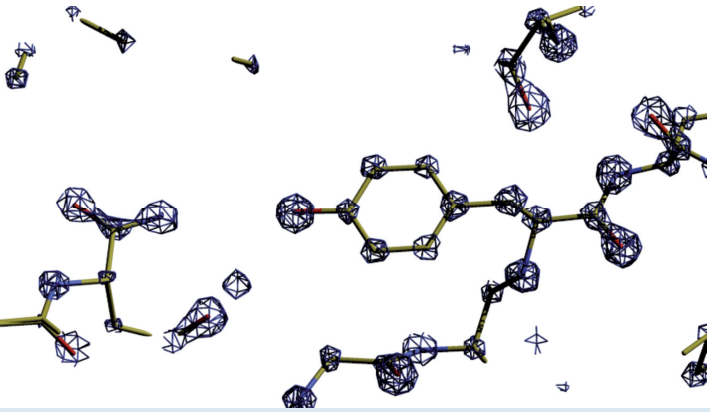

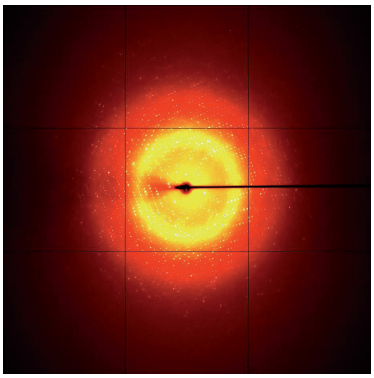

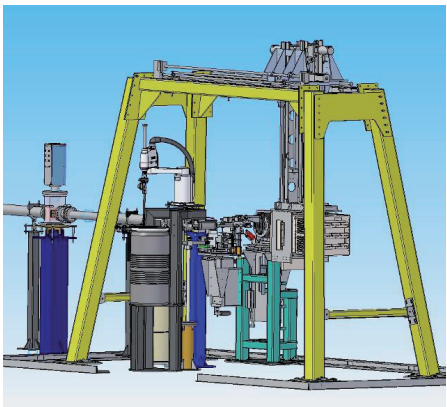

FMB Berlin
Tel: +49 (0)30 67 77 30-0
info@fmb-berlin.de

www.fmb-oxford.com
www.fmb-berlin.de

FMB Oxford
Tel +44 (0)1865 320300
sales@fmb-oxford.com