MANUAL # M360644

The Manuals in LP are intended for internal Elgar use only. When you print this manual some drawings may not be legible.
All drawings within the manuals are printed at 8 1/2 X 11. However you can download or print an 11 X 17 copy of each drawing from LP as needed.
Otherwise, contact Document Control for a hard copy manual if needed.

Sorensen

DCR-B2 SERIES

500-Watt &1000-Watt
Power Supplies

Installation Manual

Manual covers DCR-B2 models:

500-Watt	1000-Watt
10-40B2	10-80B2
20-25B2	20-50B2
40-13B2	40-25B2
60-9B2	60-18B2
80-6B2	80-12B2
150-3B2	150-6B2
300-1.5B2	300-3B2
600-.75B2	600-1.5B2

SORENSEN
Division of Elgar
9250 Brown Deer Road
San Diego, CA 92121-2294
1-800-525-2024
Tel: (858) 450-0085
Fax: (858) 458-0267
Email: sales@sorensen.com
www.sorensen.com

©2000 by Sorensen, Division of Elgar Electronics Corporation
This document contains information proprietary to Sorensen, Elgar Electronics Corporation. The information contained herein is not to be duplicated or transferred in any manner without prior written permission from Sorensen.

March, 2000 Document No. M360644 Rev B

SORENSEN FIVE–YEAR WARRANTY

Sorensen, a division of Elgar Electronics Corporation, warrants its products to be free from defects in material and workmanship. This warranty is effective for five years from the date of shipment of the product to the original purchaser. Liability of Sorensen under this warranty shall exist provided that:

- the Buyer exposes the product to normal use and service and provides normal maintenance on the product;
- Sorensen is promptly notified of defects by the Buyer and that notification occurs within the warranty period;
- the Buyer receives a Return Material Authorization (RMA) number from Sorensen's Repair Department prior to the return of the product to Sorensen for repair, phone 800-458-4258;
- the Buyer returns the defective product in the original, or equivalent, shipping container;
- if, upon examination of such product by Sorensen it is disclosed that, in fact, a defect in materials and/or workmanship does exist, that the defect in the product was not caused by improper conditions, misuse, or negligence; and,
- that Sorensen QA seal and nameplates have not been altered or removed and the equipment has not been repaired or modified by anyone other than Sorensen authorized personnel.

This warranty is exclusive and in lieu of all other warranties, expressed or implied, including, but not limited to, implied warranties of merchantability and fitness of the product to a particular purpose. Sorensen, its agents, or representatives shall in no circumstance be liable for any direct, indirect, special, penal, or consequential loss or damage of any nature resulting from the malfunction of the product. Remedies under this warranty are expressly limited to repair or replacement of the product.

CONDITIONS OF WARRANTY

- To return a defective product, contact a Sorensen representative or the Sorensen factory for an RMA number. Unauthorized returns will not be accepted and will be returned at the shipper's expense.
- For Sorensen products found to be defective within thirty days of receipt by the original purchaser, Sorensen will absorb all ground freight charges for the repair. Products found defective within the warranty period, but beyond the initial thirty-day period, should be returned prepaid to Sorensen for repair. Sorensen will repair the unit and return it by ground freight pre-paid.
- Normal warranty service is performed at Sorensen during the weekday hours of 7:30 am to 4:30 pm Pacific time. Warranty repair work requested to be accomplished outside of normal working hours will be subject to Sorensen non-warranty service rates.
- Warranty field service is available on an emergency basis. Travel expenses (travel time, per diem expense, and related air fare) are the responsibility of the Buyer. A Buyer purchase order is required by Sorensen prior to scheduling.
- A returned product found, upon inspection by Sorensen, to be in specification is subject to an inspection fee and applicable freight charges.
- Equipment purchased in the United States carries only a United States warranty for which repair must be accomplished at the Sorensen factory.

Sorensen

Committed to Quality...Striving for Excellence

TABLE OF CONTENTS

SECTION 1 **INTRODUCTION** **PAGE**

1.1 INTRODUCTION 1

1.2 DESCRIPTION 1
- 1.2.2 Automatic Crossover 1
- 1.2.3 Remote Sensing 2
- 1.2.4 Series Operation 2
- 1.2.5 Parallel Operation 2
- 1.2.6 Remote Programming 2
- 1.2.7 Unit Shutdown Circuit 2
- 1.2.8 Protection Features 2

1.3 OPTIONAL MODIFICATIONS 3

1.4 SPECIFICATIONS 3

SECTION 2 **INSTALLATION**

2.1 GENERAL 6

2.2 INITIAL INSPECTION 6

2.3 ELECTRICAL INSTALLATION 6
- 2.3.1 Input Power Connection 6

2.4 MECHANICAL INSTALLATION 7

2.5 ELECTRICAL CHECK 7
- 2.5.1 Voltage Mode 7
- 2.5.2 Current Mode 8

SECTION 3 **OPERATION**

3.1 GENERAL 9

3.2 VOLTAGE MODE OPERATION 12
- 3.2.1 Local Sensing 12
- 3.2.2 Remote Sensing 12
- 3.2.3 Resistance Programming Voltage Mode 14
- 3.2.4 Signal Programming Voltage Mode 16

TABLE OF CONTENTS (Con't)

3.3 CURRENT MODE OPERATION 16
3.3.1 Resistance Programming Current Mode 17
3.3.2 Signal Programming Current Mode 18
3.3.3 Alternate Current Programming Method 19
3.3.3.1 Calibration Procedure 19

3.4 PARALLEL OPERATION 21
3.4.1 Direct Paralleling 21

3.5 SERIES OPERATION 23
3.5.1 Direct Series Connections 23
3.5.2 Master/Slave Connection 24

3.6 UNIT SHUTDOWN CIRCUIT 27

3.7 OVP 28
3.7.1 OVP Adjustment 28
3.7.2 Cautions 28

3.8 CHANGEABLE CURRENT PROGRAMMING PARAMETERS 29

SECTION 1 INTRODUCTION

1.1 ..... INTRODUCTION

This manual contains installation and operation data on the 500 watt and 1000 watt units of the DCR-B2 series Sorensen Power Supplies. It is intended to familiarize the user with the functioning of the unit and to introduce the varied applications to which the unit may be adapted.

Three major sections form the manual divisions. Section 1 contains a brief functional description of the DCR-B2 series power supplies. Initial inspection and checkout procedures are outlined in Section 2. Operating instructions, including methods for adapting units to various applications, comprise Section 3.

1.2 ..... DESCRIPTION

1.2.1 ..... General

Designed for either bench or rack use, the typical DCR-B2 power supply provides a highly regulated, precise dc output, adjustable over a wide range. It operates from a nominal 115 Vac (208/220/230 Vac inputs are available as options) and exhibits a rapid response to transients, both load and line.

DCR-B2 series supplies are a phase-controlled type with SCR's (Silicon Controlled Rectifiers) or Triacs at the input to the transformer, followed by a passive LC filter. This design allows for a wide range of output voltages, simplicity of design, and offers large amounts of regulated power at relatively high efficiencies compared to linear regulators.

Silicon type semiconductors are used extensively in DCR-B2 circuitry, and contribute significantly to the units wide ambient temperature range characteristic. Low dissipation transistors and diodes are located on a single printed circuit board while high dissipation devices are heat-sinked to aluminum brackets and heatsinks.

All controls used during normal operation are mounted on the front panel. These include a power circuit breaker, FINE and COARSE VOLTAGE adjust potentiometers, and FINE and COARSE CURRENT adjust potentiometers. The system output is taken across a terminal pair at rear terminal strip TB2 or from the optional binding posts on the front panel of the supply.

A variety of Sorensen power supply application notes are available through your Sorensen Service Representative. These notes detail many hook-up configurations and special usages available to meet most power supply applications.

1.2.2 ..... Automatic Crossover

There are two basic operating modes, voltage and current. In the voltage mode, the voltage is held constant while the current varies with the load. In the current mode, the voltage varies, and current is held constant. The automatic crossover feature enables the unit to switch operating modes as a function of load requirements. If, for example, load current attempts to increase above a preset current limit, the unit will switch operation automatically from the voltage to the current mode. In this mode, the current will be regulated at the value preset on the front panel. If load requirements are lowered, return to the voltage regulating mode will occur automatically. Two red panel lamps indicate whether operating in the voltage or current mode.

1.2.3 ..... Remote Sensing

Terminals located on rear-mounted terminal board TB3 offer a means of extending a unit's regulating point from the output terminals to the load. This effectively compensates for variations in the load lead voltage drop. Section 3 outlines the connections for remote sensing.

1.2.4 ..... Series Operation

For applications requiring output voltages higher than a single unit can provide, DCR-B2 power supplies may be connected in series (See Section 3). Regulation in series operation is the sum of the regulations for all units.

1.2.5 ..... Parallel Operation

Parallel operation may be used to service those applications requiring an output current higher than a single supply can provide. Using a master/slave approach, a maximum of four units can be connected in parallel. An alternate method of connection is direct paralleling. With this approach, there is no limit to the number of units which can be paralleled. The regulation will deteriorate, and will be the sum of the regulations for the individual settings plus the output voltage differences between units at no load.

1.2.6 ..... Remote Programming

Output voltage or current of DCR-B2 power supplies may be remotely programmed in either the voltage or current mode by resistance or voltage signal. Details and considerations are given in Section 3.

1.2.7 ..... Unit Shutdown Circuit

In the DCR-B2 line, application of the plus (+) sense (terminal 1 of TB3) to the shutdown terminal (terminal 11 of TB3) quickly shuts down the supply. This function can provide unit protection by connecting a temperature or voltage sensitive switch (or transistor) in this line to shut the system down under specified conditions. An example is in the master/slave connection of two DCR-B power supplies (refer to Section 3, Operating Instructions). If the shutdown function is adapted to the master unit, the system output goes to zero; if applied to the slave unit, only that unit is affected and the system output is reduced accordingly.

1.2.8 ..... Protection Features

Protection against the effects of overloads and internal short circuits is provided. Overload protection is inherent in automatic crossover. The main power circuit components are protected by the unit circuit breaker. Control circuitry is protected by a fuse on the board.

In the event of an overvoltage condition at the output, such as a failure in the power supply or an externally induced condition, an overvoltage electronic crowbar is actuated by an integral OVP sensing circuit. The crowbar acts to quickly reduce the output voltage to zero. (See details in Section 3).

1.3 ..... OPTIONAL MODIFICATIONS

The standard DCR-B2 unit is designed for operation from a nominal 115 Vac input; however, units may be purchased factory modified to accept inputs of 208, 220 or 230 Vac (modifications M1, M2 or M3 respectively).

The sides of the DCR-B2 have inserts to allow attachment of slide rails. Consult the factory for information on these optional slide rails.

For information on additional modifications, consult the factory.

1.4 .....SPECIFICATIONS

The specifications for the DCR-B2 500 watt series power supplies are given in Table 1-1, and the 1000 watt series in Table 1-2.

TABLE 1-1 SPECIFICATIONS

DCR-B2 SPECIFICATIONS

500 WATT SERIES

DCR Model	OUTPUT POWER			Constant Voltage Ripple (PARD) (mVrms)	Constant Current Ripple (PARD) (mArms)	TEMPCO		REMOTE PROGRAMMING		SIGNAL	Eff (% Typ.)	INPUT POWER			OUTPUT IMPEDANCE (Typical)		
	Voltage (Vdc)	Current 40°C	(Adc) 70°C			(mV/ °C)	(mA/ °C)	(Ohms/V)	(Ohms/A)	(Volt In/ Volt Out)		Voltage Range (Vac) Note 1	Current Max. (Aac) Note 2	Power Factor (Typ.)	120Hz	1kHz	10kHz
10-40B2	0-10	40	20	65	260	1.5	12	1200	10	1/1	61	103-127	8.7	.65	.025	.020	.060
20-25B2	0-20	25	13	65	82	3.0	7.5	600	16	1/2	71	103-127	9.4	.65	.030	.025	.075
40-13B2	0-40	13	6.6	90	30	6.0	3.9	300	30	1/4	71	103-127	9.8	.65	.050	.040	.125
60-9B2	0-60	9	5	125	19	9.0	2.7	200	46	1/6	75	103-127	9.7	.65	.075	.060	.180
80-6B2	0-80	6	3.3	150	12	12.0	1.8	150	68	1/8	77	103-127	8.3	.65	.125	.110	.300
150-3B2	0-150	3	1.7	300	6	22.5	0.9	80	134	1/15	74	103-127	8.2	.65	.560	.530	.620
300-1.5B2	0-300	1.5	0.8	700	4	45.0	0.45	40	270	1/30	74	103-127	8.9	.60	1.90	1.80	2.0
600-75B2	0-600	0.75	0.4	1200	2	90.0	0.225	20	530	1/60		103-127	8.9	.60	8.4	8.0	8.5

Notes:
1. Optional Inputs: 208V, 220V, 230V (Options M1, M2, M3 respectively)
2. At 115V input

COMMON SPECIFICATIONS

Voltage Mode:

Regulation: 0.03% with load change (NL to FL or FL to NL) or a ± 10% line voltage change.

Drift (%Eo max): 0.1% typical, for 8 hours after 30-minute warmup with constant line, load, and ambient temperature.

Transient Res: 50ms (typical) to return to ±1% band for a step load change 50%-100% or 100%-50% of full load (10V models ±3% band, 20V models ± 2%). Below 60 Hz, ripple and transient response characteristics will deteriorate by a factor of $(60/f)^2$) where ¦ is the input frequency.

Current Mode:

Regulation: 0.25% with 0-95% compliance-voltage change or ± 10% line voltage change.

Resolution: 0.05% of Io max (typical)

Drift (% Io max): 0.15% (typical)

General:

Series Operation: To 200 Vdc Maximum. (150 and 300 volt models, only two in series).

Parallel Operation: By master-slave (four units maximum) or straight parallel..

Remote Sensing: See paragraph 3.2.2

Op Temp Range: 0°C to 70°C

Storage Temp: -40°C to +85 °C

Isolation Voltage: 1000Vdc input to output.

Finish: Bonderize-Black semi-gloss with white lettering.

Overload/Short-circuit Protection: Adjustable current limiting with automatic recovery.

Overvoltage Protector: Fully adjustable OVP on all models, internal.

Average weight: 105 lbs.

TABLE 1-2 SPECIFICATIONS

DCR-B2 SPECIFICATIONS

1000 WATT SERIES

DCR Model	OUTPUT POWER			Constant Voltage Ripple (PARD) (mVrms)	Constant Current Ripple (PARD) (mArms)	TEMPCO		REMOTE PROGRAMMING		SIGNAL	Eff (% Typ.)	INPUT POWER		
	Voltage (Vdc)	Current 40°C	(Adc) 70°C			(mV/°C)	(mA/°C)	(Ohms/ V)	(Ohms/ A)	(Volt In/ Volt Out)		Voltage Range (Vac) Note 1	Current Max. (Aac) Note 2	Power Factor (Typ.)
10-80B2	0-10	80	40	65	260	1.5	24	1200	5	1/1	62	103-127	16	.69
20-50B2	0-20	50	25	65	125	3.0	15	600	8	1/2	67	103-127	20	.62
40-25B2	0-40	25	13	90	50	6.0	7.5	300	16	1/4	79	103-127	16	.68
60-18B2	0-60	18	8.6	125	38	9.0	5.4	200	22	1/6	81	103-127	19	.60
80-12B2	0-80	12	6.6	150	23	12.0	3.6	150	33	1/8	83	103-127	15	.65
150-6B2	0-150	6	3.3	300	12	22.5	1.8	80	66	1/15	84	103-127	15.5	.60
300-3B2	0-300	3	1.65	700	7	45.0	0.9	40	133	1/30	85	103-127	15.7	.60
600-1.5B2	0-600	1.5	.825	1200	6	90.0	0.9	20	133	1/60	86	103-127	27.4	.66

Notes:
1. Optional Inputs: 208V, 220V, 230V (Options M1, M2, M3 respectively)
2. At 115V input

COMMON SPECIFICATIONS

Voltage Mode:

Regulation: 0.03% with load change (NL to FL or FL to NL) or a ± 10% line voltage change.

Drift (%Eo max): 0.1% typical, for 8 hours after 30-minute warmup with constant line, load, and ambient temperature.

Transient Res: 50ms (typical) to return to ±1% band for a step load change 50%-100% or 100%-50% of full load (10V models ±3% band, 20V models ± 2%). Below 60 Hz, ripple and transient response characteristics will deteriorate by a factor of $(60/f)^2$) where ¦ is the input frequency.

Current Mode:

Regulation: 0.25% with 0-95% compliance-voltage change or ± 10% line voltage change.

Resolution: 0.05% of Io max (typical)

Drift (% Io max): 0.15% (typical)

General:

Series Operation: To 200 Vdc Maximum. (150 and 300 volt models, only two in series).

Parallel Operation: By master-slave (four units maximum) or straight parallel..

Remote Sensing: See paragraph 3.2.2

Op Temp Range: 0°C to 70°C

Storage Temp: -40°C to +85 °C

Isolation Voltage: 1000Vdc input to output.

Finish: Bonderize-Black semi-gloss with white lettering.

Overload/Short-circuit Protection: Adjustable current limiting with automatic recovery.

Overvoltage Protector: Fully adjustable OVP on all models, internal.

Average weight: 40 lbs.

SECTION 2 INSTALLATION

2.1 ..... GENERAL

After unpacking, perform initial inspections and preliminary electrical check procedures to assure that the unit is in good working order. If it is determined that the unit is damaged, the carrier should be notified immediately. Repair problems should be directed to the nearest Sorensen representative, or to the factory.

2.2 ..... INITIAL INSPECTION

Proceed as follows to inspect for damage incurred during shipment:

1. Inspect panel and chassis for scratches, dents and chips.

2. Turn front panel voltage and current controls from stop to stop. Rotation should be smooth through a 300 degree rotation.

3. Check meter faces for cracked or broken windows. Check each meter pointer for zero indication. If necessary, use adjust screw to bring indicator to zero.

4. Look for cracked or broken lenses on indicating lights.

5. Alternate power switch between ON and OFF. Action should be both positive and audible. Return switch to OFF position.

6. Remove rear Lexan Safety cover, and check terminal block TB3.Make sure that links are firmly in place across terminals 3-4, 5-6, 7-8. Replace cover.

7. Remove top cover retaining screw. Inspect components and printed circuit board for damage. Replace cover.

2.3 ..... ELECTRICAL INSTALLATION

Standard units are shipped ready for use with nominal 115 Vac input, but may be factory or field modified to operate from a nominal 208, 220 or 230 volt input. (M1, M2, M3 options respectively).

2.3.1 ..... Input Power Connection

For 500 watt units the input power cord is a Nema 5-15P type which terminates in a three prong, polarized plug. For your safety the unit chassis is wired to the plug through the line cord, and therefore, the insertion of the plug into a compatible receptacle, hooked up to a grounded input, will automatically ground the unit. If a grounded input is not available, use an adapter, making sure that the adapter's external lead is well grounded.

For 1000 watt units, input power connections are provided on TB1 terminal block located on the rear panel. For safety, insure center terminal is connected to earth (chassis) ground.

2.4 ..... MECHANICAL INSTALLATION

As received, the unit is ready for bench use. To adapt for rack mounting, simply remove feet and reinstall the feet retaining screws. As the 500 watt units are convection cooled, and the 1000 watt units are fan cooled, care must be taken when rack mounting to assure free air flow.

CAUTION

During installation, if two or more supplies are to be rack mounted or otherwise stacked, the operating ambient of the upper units should not exceed 70°C. Output current must be derated according to specifications for ambients above 40°C/104°F.

2.5 ..... ELECTRICAL CHECK

2.5.1 ..... Voltage Mode

To check voltage mode operation, proceed as follows:

1. Set POWER switch to OFF. Connect input as per paragraph 2.3.
2. Turn COARSE and FINE VOLTAGE controls fully counterclockwise; turn COARSE and FINE CURRENT controls fully clockwise.
3. Set unit power switch to ON with zero load current.
4. Turn COARSE VOLTAGE control slowly clockwise while observing theunit voltmeter. The pointer should swing upscale, and the voltage indicator light should be ON.
5. With the pointer at half scale, rotate the FINE VOLTAGE control from stop to stop. The voltage should vary approximately 0.4% of maximum output voltage.
6. Set POWER switch to OFF.

2.5.2 ..... Current Mode

To check current mode operation, proceed as follows:

1. Set POWER switch to OFF.

2. Turn COARSE and FINE CURRENT controls fully counterclockwise. Set COARSE VOLTAGE control to its mid position.

3. Connect a wire, of sufficient gauge to handle full output current, across the output terminals. [TB2 (+) to TB2 (-)]

4. Set unit power to ON. The CURRENT mode indicator will illuminate.

5. Rotate COARSE CURRENT control slowly clockwise until a current indication appears. Continue clockwise rotation; the meter indication will increase accordingly.

6. Set unit POWER switch to OFF, and remove shorting wire.

SECTION 3 OPERATION

3.1 ..... GENERAL

This section provides basic operating instructions, and details the methods by which DCR-B2 power supplies may be adapted to their more common applications including remote sensing, remote programming, series and parallel operation. Table 3-1 identifies the operating controls shown in Figure 3-1, and describes their functions. Figure 3-2 describes the functions of the TB3 connections on the rear panel and its programming options (see para. 3.2.3 - 3.3.2).

WARNING

Full system voltage appears across the unit output terminals. Follow operating procedures exactly and do not make terminal board or load terminal alterations with unit power ON.

High voltage output and loss of current limiting can result from loosening or removing links on rear mounted terminal board TB3. This may result in personal injury and damage to equipment. Do not remove or loosen any links unless specifically instructed in the following procedures.

F1 on PCB near connector is at AC potential. This could cause personal injury. Disconnect power before removing PCB.

CAUTION

This unit contains an integral OVP device. This device places a short circuit across the output terminals when the OVP trip level setting is exceeded. If the load contains large capacitors or is an active load (such as a battery), the stored energy in the load will be discharged into the OVP device. This discharge may injure the OVP and/or the load. Connect a series diode in the output lead to block the load discharge, in such cases. See Figure 3-9 for typical diode connection and types.

Table 3-1 Front Panel Controls and Indicators

CONTROL/INDICATOR	FUNCTION
POWER indicator	A white light connected across the primary of input transformer T2. Illuminates when the unit POWER switch is in the ON position.
POWER switch	On 500 watt units a 115 volt, 15 ampere circuit breaker is used to connect or disconnect input line voltage. On 1000 watt units a 250 volt, 20 ampere circuit breaker is used.
COARSE CURRENT adjust	A 650 ohm potentiometer used in the first stage of the current-mode amplifier to vary the reference, and subsequently the output current.
FINE VOLTAGE adjust and FINE CURRENT adjust	80 ohm potentiometers connected in series with the COARSE VOLTAGE and CURRENT potentiometers, used to makee slight variations in the output voltage or current.
CURRENT mode indicator	A red light which illuminates when the unit is operating in the current regulating mode.
Panel voltmeter	A meter connected in series with the NEGATIVE output, to indicate unit output voltage.*
Panel current meter	A meter connected in series with the NEGATIVE output, to indicate unit output current.
VOLTAGE mode indicator	A red light which illuminates when the unit is operating in the voltage regulating mode.
COARSE VOLTAGE adjust	A 13K ohm potentiometer across which the reference voltage for voltage-mode operation is developed. Used to adjust the output voltage.

* In local sense mode only; when remote sensing is used, indicates voltage across load.

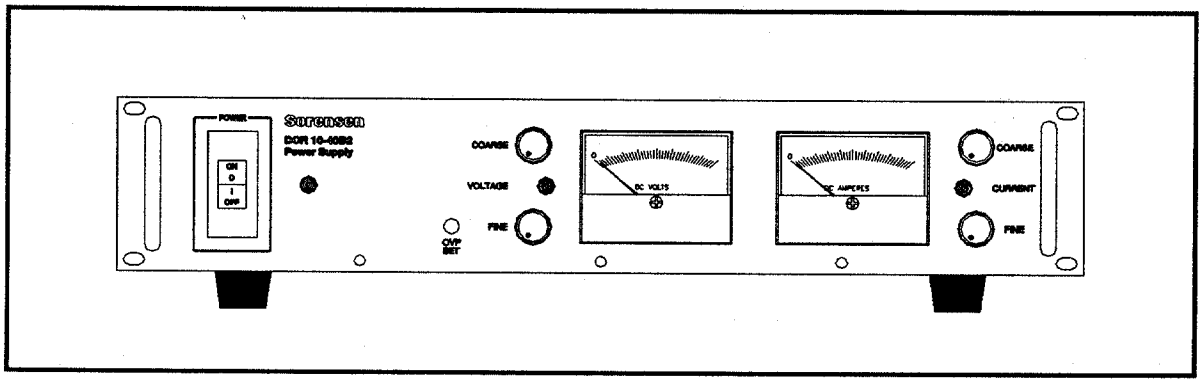

Figure 3-1 DCR-B2 Controls and Indicators

REMOTE SHUTDOWN	
Sink 1 mA to Regulator Common	TB3-11
CURRENT CONTROL	
Internal Current Shunt, Positive.	TB3-10
(Approx. 0.4V for rated output.)	
Internal Current Shunt, Negative.	TB3-9
CURRENT PROGRAMMING	
Resistance: Remove jumper 7-8, connect program resistor between 8-9.	TB3-8
Voltage: Remove 7-8 connect signal (0-10V) to 8 positive, return to 9. OBSERVE POLARITY	TB3-7
VOLTAGE PROGRAMMING	
Resistance: Remove jumper 5-6, connect program resistor between 4-5.	TB3-6
Voltage: Remove jumper 3-4, connect signal (0-10V) to 3 (positive), return to 1. OBSERVE POLARITY	TB3-5
Variable reference output, 0-10V.	TB3-4
Error Amplifier Input.	TB3-3
OUTPUT VOLTAGE SENSE	
Sense current = 1.0mA (Neg Lead)	TB3-2 (-)
= 20mA (Pos Lead) (Typical)	
Load Circuit Burden = .5V/Lead.	TB3-1 (+)
(Regulator Common)	
(- sense) is jumpered to - OUTPUT	
(+ sense) is jumpered to + OUTPUT	

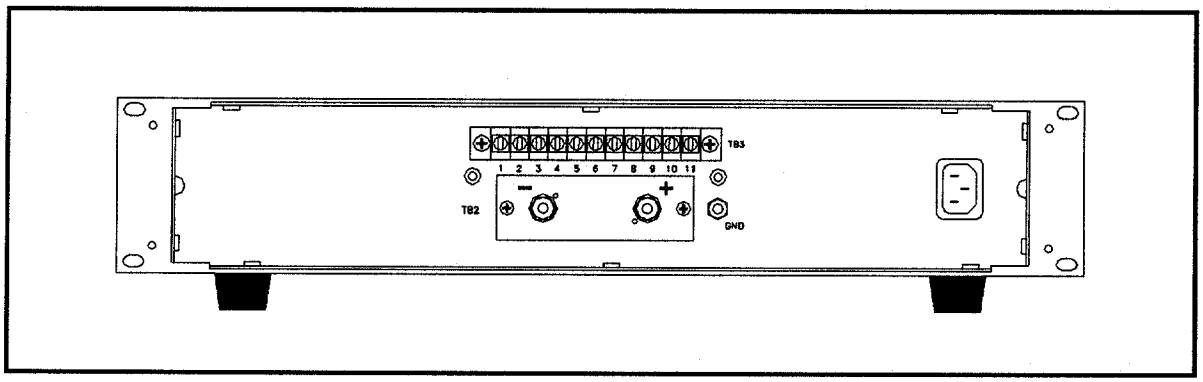

Figure 3-2 TB3 Terminal Block Connections

3.2 ..... VOLTAGE MODE OPERATION

3.2.1 ..... Local Sensing

DCR-B2 series units are shipped ready for use in the local sensing configuration, that is, with unit regulation occurring at the output terminals. Local sensing is usually acceptable for applications where the load current is nearly constant (or when large output conductors are used). In special applications (where load regulation is critical) remote sensing may be used (see para. 3.2.2). To operate unit in the voltage mode and local sensing configuration, proceed as follows:

1. Set POWER to OFF, connect appropriate input voltage.
2. Rotate the VOLTAGE controls fully counterclockwise, and the CURRENTcontrols fully clockwise.
3. Set unit power to ON. Power light will illuminate.
4. Rotate COARSE VOLTAGE control until the unit voltmeter indicates the desired output voltage. Use FINE VOLTAGE control for small adjustments.
5. Set unit power to OFF.
6. Remove rear Lexan Saftey cover and connect load lines to output terminals. Replace cover.
7. Set unit power to ON, and turn CURRENT control to the desired current limiting value. POWER light will illuminate, and the unit is in voltage mode operation.

NOTE

With unit in the voltage mode, an increase in load current requirements above the value set in step 7 will cause an automatic crossover to the current mode (current limiting). The current mode indicator will illuminate when this occurs.

3.2.2 ..... Remote Sensing (Figure 3-3)

In the remote sensing condition, voltage regulation is at the load rather than at the unit output terminals. This compensates for voltage drop variations in the load lines.

NOTE

Voltage drop should not exceed 3 volts maximum per load lead, 1 volt maximum on 150 to 600V models. Voltage across the load is equal to voltage output of the unit minus line drops.

On high voltage models (150 to 600V), the 3V drop in the external load lines may cause damage to the DCR control amplifier under load short circuit conditions. A large portion of the rated output voltage is dropped across the load lines under the load short condition, and this high voltage will enter the amplifier causing damage. For this reason, it is recommended that remote sensing be avoided, or that the external line drop not exceed 1 volt per load line on the 150 to 600 Vdc models.

Note that a heavy pulse load can act the same as a momentary load short, and may damage the amplifier under remote sense conditions.

Consult the factory for recommendations if you intend to use remote sense under load shorting (or pulse loading) conditions.

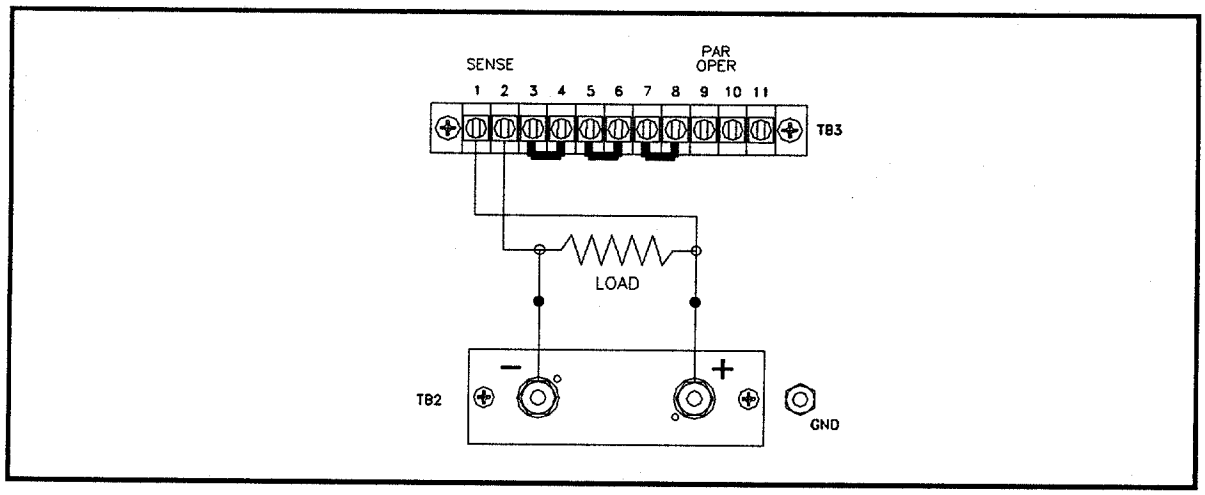

Figure 3-3 Remote Sensing Connections

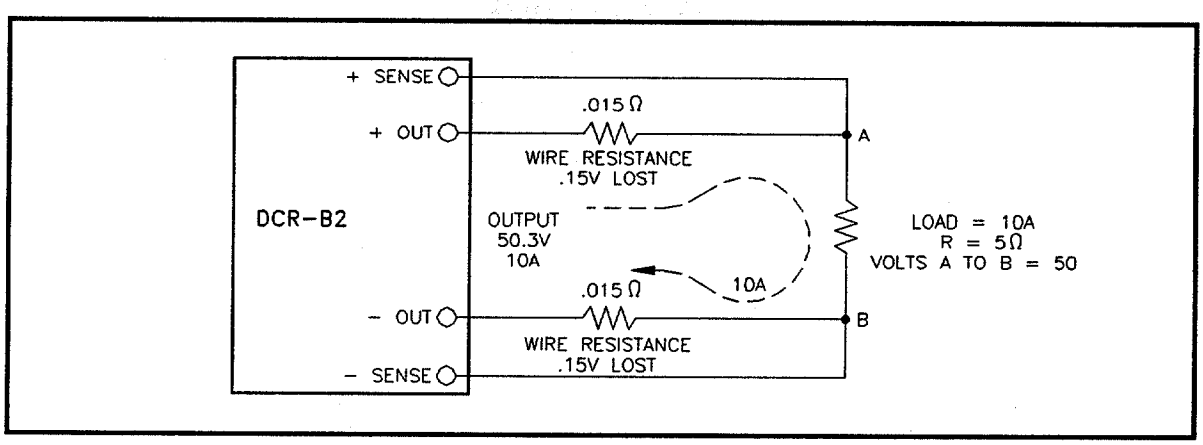

Figure 3-4 Illustration of Load Lead Resistance (Remote Sensing)

To adapt unit for remote sensing operation, proceed as follows:

1. With no load on the unit, apply input power and set output voltage to the desired value; then set POWER switch to OFF.

2. Remove rear Lexan Safety cover and disconnect red and black wires going from the plus and minus output terminals to the plus and minus sense terminals.

3. Run output lead from the load to the plus and minus output terminals.

4. Connect sensing leads from plus sense and minus sense terminals to the load. OBSERVE POLARITY. To reduce stray pickup, use shielded cable (shield grounded at the supply) or a twisted pair of wires for sensing leads.

5. Replace the rear Lexan Safety cover and set POWER to ON.

3.2.3 ..... Resistance Programming Voltage Mode (Figure 3-5)

The output voltage of any model in the DCR-B2 series may be controlled from remote locations by connecting a resistance (fixed or variable) into the voltage mode amplifier reference circuit. Terminals on rear terminal board TB3 are provided for this purpose.

The ohms/volt sensitivity for each unit is listed in the specifications (para. 1.4). The programming resistor should have a low temperature coefficient (±30 ppm), and should dissipate approximately 10 milliwatts. Programming current is approximately 1.0 milliampere. If changes in the programmed output are to be made by abrupt changes in programming resistance, make before break switching should be used.

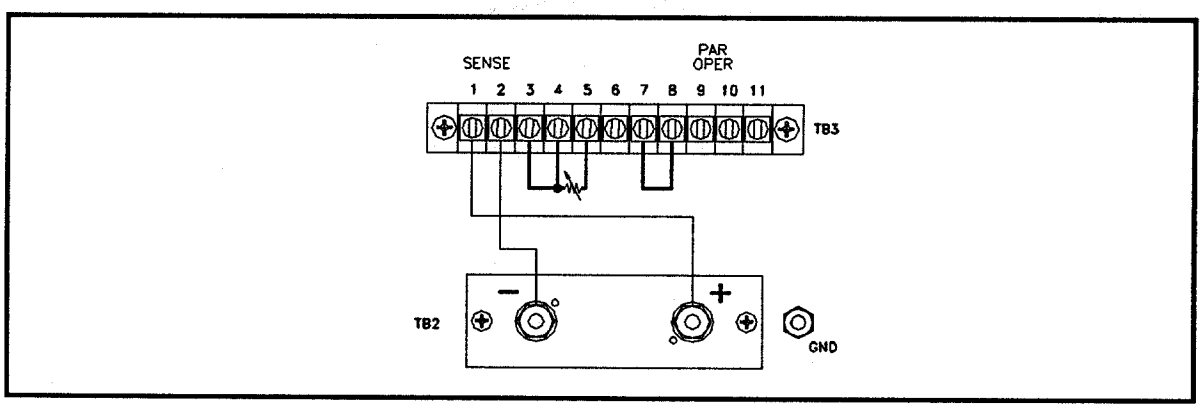

Figure 3-5 Resistance Programming Voltage Mode Connections

To adapt unit to resistance programming operation, proceed as follows:

1. Set unit power to OFF.

2. Remove link between terminals 5 and 6, and connect a programming resistor between terminals 4 and 5 (Figure 3-5). Use shielded or twisted wire for interconnecting leads.

3. Rotate COARSE and FINE VOLTAGE controls fully counterclockwise. Set POWER switch to ON.

4. Rotate CURRENT controls to desired limiting value. Remove input power, and connect load to output terminals.

5. Set POWER switch to ON. Unit will now supply programmed voltage to load.

CAUTION

If programming operation is to be discontinued, set POWER switch to OFF, remove programming resistor, and reconnect link between terminals 5 and 6.

NOTE

Panel controls are disabled when unit is connected in this way.

3.2.4 ..... Signal Programming Voltage Mode

A fixed or variable voltage signal may be fed into the voltage mode amplifier circuit to provide a fixed or variable voltage output. The selected signal source output should be floating, unless the positive output of the DCR-B2 supply is grounded. The required signal is 0-10V capable of sourcing 1 mA. Proceed as follows:

1. Set POWER switch to OFF.
2. Remove link from between terminals 3 and 4 of TB3.
3. Connect the signal source between terminals 3 and 1 of TB3. OBSERVE POLARITY. (Positive end to terminal 3).

CAUTION

If programming voltage exceeds 10V, excessive output voltage could occur which can damage the unit.

3.3 ..... CURRENT MODE OPERATION

In current mode operation, the current output is regulated at the value determined by the setting of the current controls. The output voltage varies as a function of load. To operate unit in the current mode proceed as follows:

1. Set POWER switch to OFF.
2. Rotate FINE and COARSE VOLTAGE controls fully counterclockwise, and adjust COARSE CURRENT control approximately three quarters clockwise.
3. Set POWER switch to ON.
4. Rotate COARSE VOLTAGE control clockwise until unit voltmeter indicates the desired voltage limit.
5. Set POWER switch to OFF.
6. Connect load to output terminals. OBSERVE POLARITY.

7. Set POWER switch to ON, and turn CURRENT controls to desired current regulation setting. CURRENT MODE light will illuminate, and unit will deliver constant, regulated current to load.

NOTE

Any output instability (such as oscillations due to inductive loading) can be eliminated by adjusting potentiometer R36 on the unit PCB.

If voltage increases above the limit set in step 4 preceding, unit will automatically crossover to voltage mode operation.

3.3.1 ..... Resistance Programming Current Mode (Figure 3-6)

DCR-B2 supplies may be programmed externally to provide output current. This is done by inserting a fixed or variable resistance into the current mode amplifier reference circuit. The programming resistor selected should have a low temperature coefficient (±30 ppm) and should dissipate approximately 0.5 milliwatt. Programming current is approximately 1.0 milliampere.

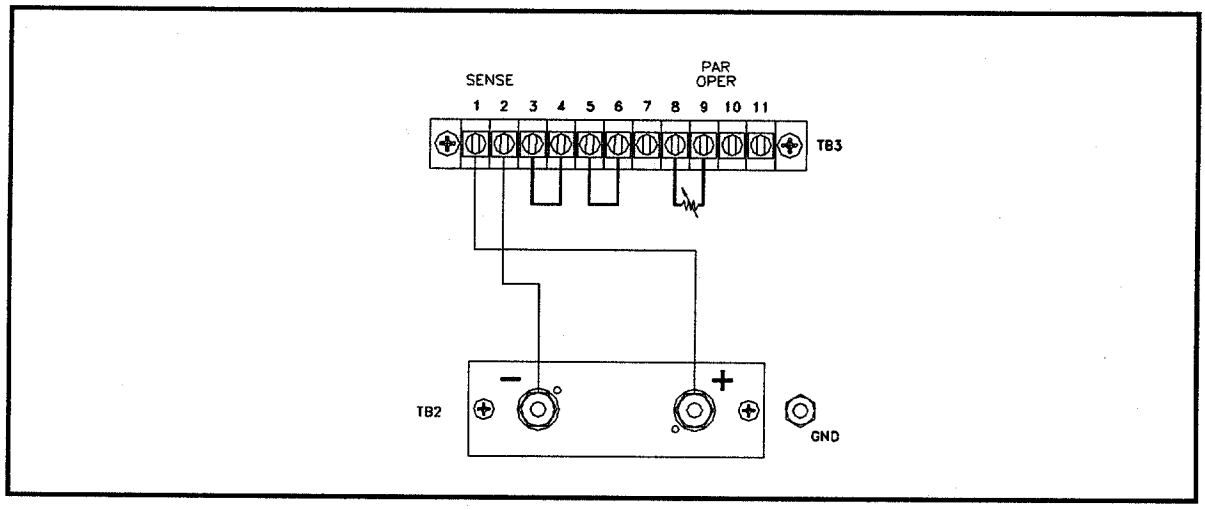

Figure 3-6 Resistance Programming Current Mode Connections

To adapt unit to the current mode, resistance programming configuration, proceed as follows:

1. Set POWER switch to OFF.

2. Remove the link between terminals 7 and 8, and rotate VOLTAGE controls to mid position.

3. Set SW1 for 0.400 mV operation (SW1-1 = Closed, SW1-2&3 = Open).

4. Insert programming resistor between terminals 8 and 9.

5. Set POWER switch to ON.

6. Adjust COARSE VOLTAGE control until unit voltmeter indicates desired voltage limit value.

7. Set POWER switch to OFF. Connect load leads to output terminals. OBSERVE POLARITY.

8. Set POWER switch to ON. CURRENT mode indicator will illuminate.

CAUTION

If resistance programming is to be discontinued, set POWER switch to OFF, remove programming device, and reconnect link between terminals 7 and 8.

3.3.2 ..... Signal Programming Current Mode

The procedure for adapting a DCR-B2 unit to current mode signal programming is identical to that for current mode resistance programming except that the signal source, (488 DAP or equivalent) rather than a programming resistor, is connected across terminals 8 and 9. A floating (ungrounded) signal source capable of sinking approximately 1.0 mA should be selected, and twisted wires should be used for the interconnecting leads. For a full range variation in unit output current, signal must have 0 to 400 mV volt range, or 0 to 10 volt range depending on SW1 setting. Terminal 8 is positive.

CAUTION

In 400 mV range setting, do not apply more than 400 mV to the DCR-B2, as the DCR-B2 current limit will be dangerously high.

3.3.3 ..... Alternate Current Programming Method

This alternate programming method is recommended for the DCR-B2 power supply. These models are designed to accept control inputs of 400 mV. This diode-isolated current-sink method, while somewhat more complex to implement, provides a maximum current limit of 115% regardless of inadvertent errors in control input.

Figure 3-7 illustrates unit interconnection for the DCR-B2 power supply series.

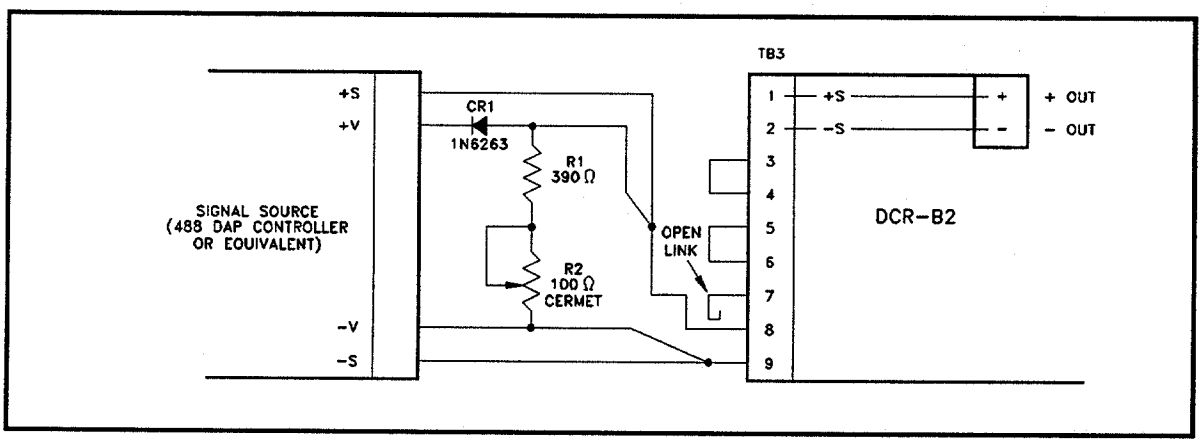

Figure 3-7 DCR-B2 Interconnections (Current Programming, 0-400 mV Range)

3.3.3.1 ..... Calibration Procedure

1. Turn signal source ON, DCR-B2 power OFF.
2. Program signal source to zero output voltage.
3. Set the DCR-B2 panel voltage control fully clockwise (or to desired voltage limit).
4. Short the DCR-B2 output terminals and apply DCR-B2 input power.
5. Set zero current adjust potentiometer R17 on the DCR-B2 PCB to the point where the output current <u>just</u> drops to zero.

NOTE

A small positive current is desirable to insure that the zero is not set too low.

6. Set signal source and DCR-B2 power OFF.

7. Disconnect the signal source only from terminals 8 and 9 of the DCR-B2. Insure that R1 and R2 in Figure 3-7 are still connected to TB3-8 and TB3-9. Short DCR-B2 output.

8. Turn DCR-B2 output ON.

9. Set external pot (R2 in Figure 3-7) to obtain 115% of rated DCR-B2 output current.

10. Turn DCR-B2 power OFF.

11. Reconnect the signal source connections removed in step 7.

12. Turn the signal source and the DCR-B2 power ON.

13. Set the signal source for 400 mV output.

14. Vary the signal source output slightly until the rated full scale dc output current of the DCR-B2 is obtained. (e.g., DCR40-13B may require 385 mV for 13A output).

15. Using output voltage obtained in step 13 to calculate the program constant (Amps output per control supply input). For example: Assume that a voltage of 385 mV is required to obtain a full 13A output. The formula would be as follows:

$$\text{PROGRAM CONSTANT} = \frac{\text{DCR-B2 Amps Out}}{\text{Signal Source mV Out}} = \text{Amps/mV}$$

$$\text{(e.g.)} \quad \frac{13\text{A}}{385} = 0.0338 \text{ Amps/mV}$$

16. Remove DCR-B2 output short.

Overvoltage from the signal source will only produce 115% of rated output current.

3.4 ..... PARALLEL OPERATION

DCR-B2 single phase units may be paralleled using either of two methods. One method uses a master/slave approach, and the other involves direct paralleling. Each method has its advantages. In master/slave operation the output voltage regulation is maintained, but only four units may be paralleled; with the direct method, there is no limit to the number of units which may be paralleled and no current derating is required. Output voltage regulation, however, does deteriorate.

3.4.1 .....Direct Paralleling (Figure 3-8)

The following steps outline the procedure for connecting two units in parallel (the same procedure may be extended to parallel as many units as desired):

1. At no load, adjust individual unit voltages to desired system output. Attempt to match individual unit outputs with FINE VOLTAGE controls.

2. Set power on each unit to OFF, and run load leads from units to load. OBSERVE POLARITY.

3. If remote sensing is to be used, connect sensing leads from units to load, also observing polarity. Use twisted wire or shielded pair for leads.

4. Set each unit POWER switch to ON.

The unit supplying the highest voltage will supply the load, as it is impossible to identically match the output voltages. If the load requirements exceed the setting on the CURRENT control, this unit will automatically cross over to current mode operation, and its output voltage will drop. The second unit will then assume that portion of the load rejected by the first. Any further increases in load will be supplied by the second unit up to its current limit setting. Regulation, therefore, will be the sum of the regulations of the units plus the difference in the voltage settings.

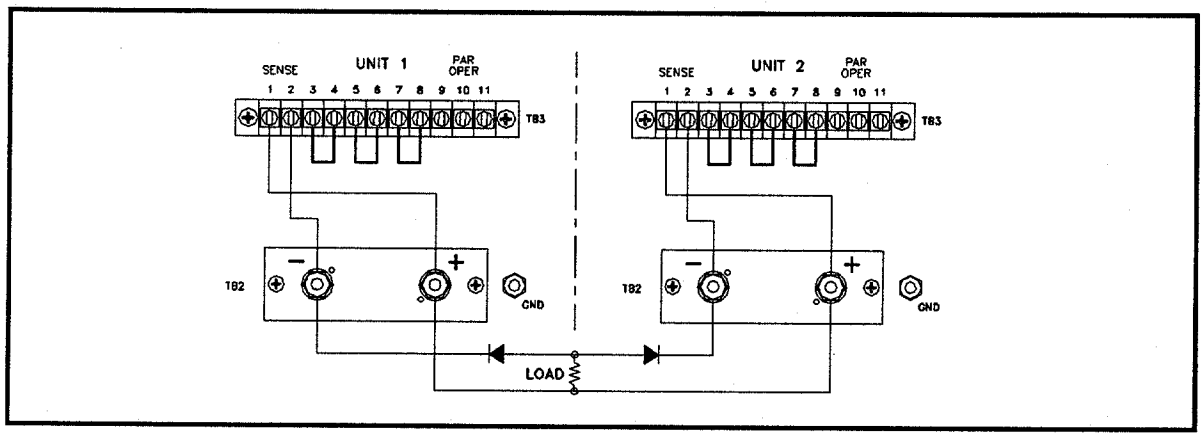

Figure 3-8 Direct Parallel Connections

For remote sensing, connect both unit + and - terminals directly to the load instead of output terminal board. OBSERVE POLARITY. Forward diode types listed in Table 3-3 for series connection will be adequate. Heatsinking is also necessary.

To connect two units in parallel, proceed as follows:

NOTE

Up to three slave units may be added by extending this procedure.

1. With no load applied, set master unit POWER switch to ON, and adjust desired system output (plus total load lead drop unless in the remote sensing mode). Set unit power to OFF.

2. Connect load leads from both units to the load. If possible, use load leads of approximately equal length. OBSERVE POLARITY.

3. Disconnect link between terminals 7 and 8 on slave unit. Set slave voltage controls fully clockwise. Connect a wire between terminal 8 of the slave unit and terminal 10 of the master unit.

4. Set master unit POWER switch to ON, and then set the slave unit POWER switch to on.

5. Adjust control R17 (on Control PCB) to balance the output currents between the paralleled units. Note that the units should be adjusted for equal output currents using the heaviest load (i.e., with both units operating near full load rating).

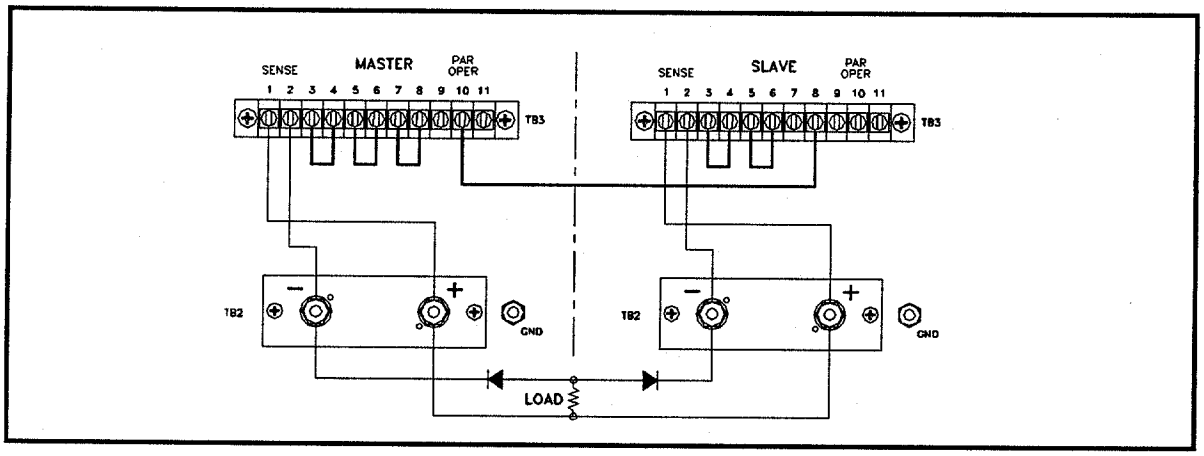

Figure 3-9 Master/Slave Connections, Parallel Operation

Forward diode types listed in Table 3-3 for series connection will be adequate. Heatsinking is also necessary.

3.5 ..... SERIES OPERATION

3.5.1 ..... Direct Series Connections (Figure 3-10)

The 10Vdc to 80Vdc DCR-B2 models may be directly series-connected for up to a total output of 200 Vdc. The 150 and 300 volt models may only have two units in series, (for 300Vdc and 600Vdc total output, respectively) and the 600 volt unit can not be series connected. Only like units may be connected in series. System regulation is the sum of the regulations of all units.

The procedure is outlined for connecting two units in series. Additional units may be connected by repeating the procedure for each.

NOTE

Series connected units may be adapted to resistance or signal programming. Be sure programming device is isolated from ground sufficiently to withstand maximum series operating potential.

1. With no load connected, set each unit to its desired output voltage level, and appropriate current limiting value.

2. Set the POWER switch of each unit to OFF.

3. Interconnect units as shown in Figure 3-10.

CAUTION

Rectifiers (and heat sinks where required) must be connected across the output terminals of each unit as shown in the figure. This will prevent damage to the output capacitors. Specific rectifier types are listed in Table 3-3.

4. Set unit power switches to ON. Units operate with independently adjustable outputs, and the power to each may be set ON or OFF separately. See Table 3-3 for diode values.

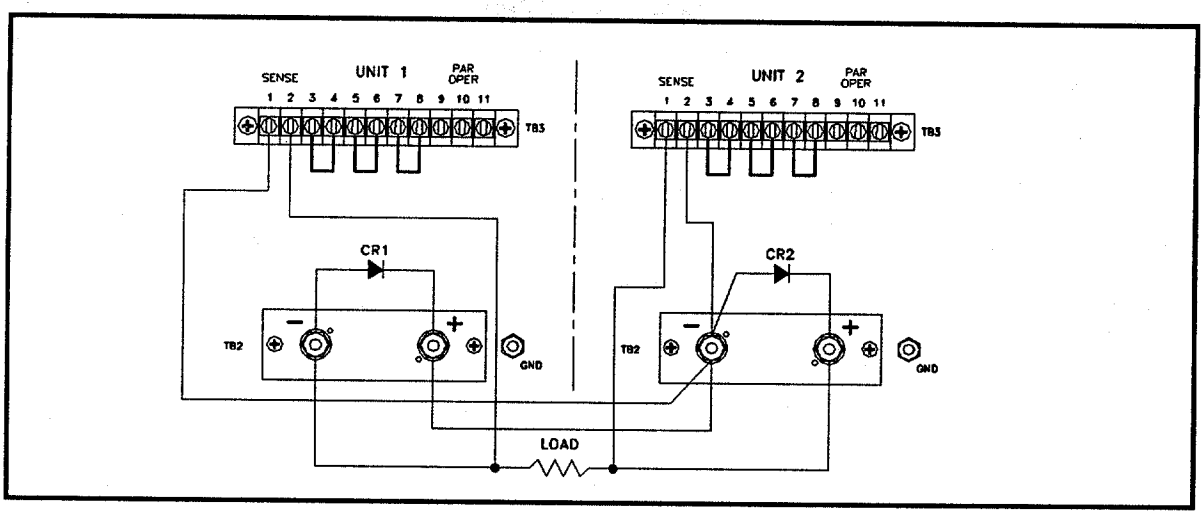

Figure 3-10 Direct Series Connections (Remote Sensing)

3.5.2.....Master/Slave Connection (Figure 3-11)

The voltage range of a DCR-B2 power supply system can be increased by series connecting units up to a total rated output of 200 Vdc (150/300 volt models, two in series) in a master/slave configuration. Two 40 volt supplies thus connected provide 0 to 80 volt range capability with voltage programming necessary only on one unit. External components required are two wire-wound resistors (RA and RB in the figure), a 15 µF bypass capacitor to eliminate noise feed-through and a shunt power rectifier across the output terminals of each unit.

Assuming two supplies with the same output ratings are to be used, (consult factory for connecting dissimilar units), connect as shown in Figure 3-11. RA and RB are low TC, wire-wound resistors of 5 watts rating or greater. Resistance values for two identical units in series have been calculated for all voltage ranges in the DCR-B2 series, and are summarized in Table 3-3 for each application. See Table 3-2 for resistor values. See Table 3-3 for diode values.

NOTE

For more than two units (with identical output ratings) connected in series, RB remains 10K, and RA is calculated using the formula:

$RA = 10^3 (Vo - 10)/X$

Where Vo is the voltage of the master supply, and X is the number of units in the system.

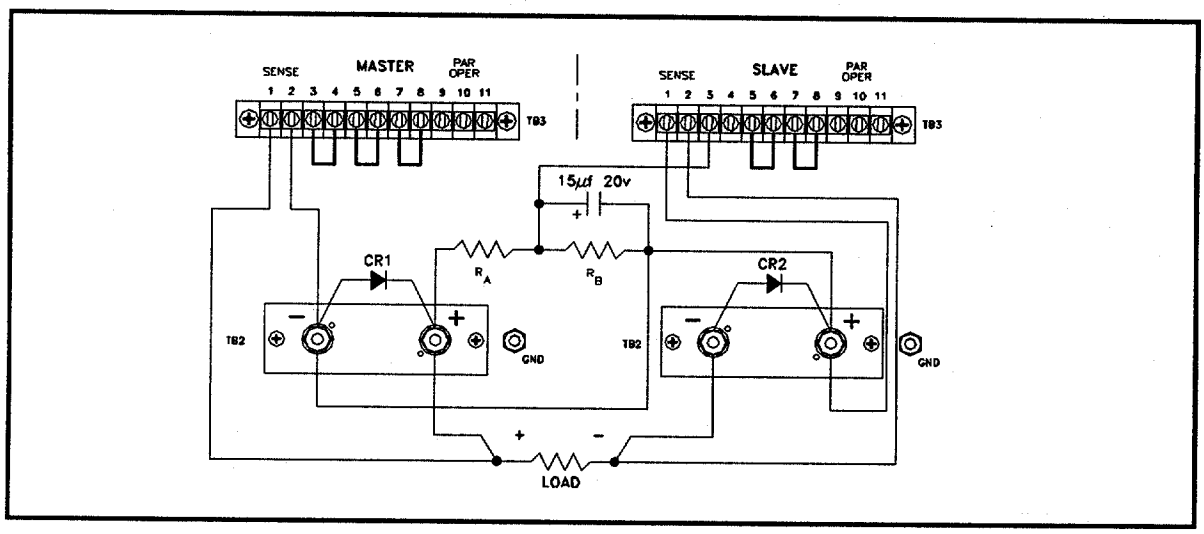

Figure 3-11 Master/Slave Connections Series Operation

Table 3-2 RA/RB Value
Two Identical DCR-B2 Units Series Connected

(V) RATED	RA	RB
10 *	Open	Open
20	5K	10K
40	15K	10K
60	25K	10K
80	35K	10K
150	70K	10K
300	145K	10K
600	295K	10K

* For 10 volt units, terminal 3 of the slave unit is connected directly to the plus (+) sense terminal of the master unit.

Table 3-3 Recommended Rectifiers/Heatsinks Series Operation

DCR Model	Manufacturer/ Type	Sorensen Part No.	Heatsink** Dim. Inches (mm)
10-40B2	1N4587 1N4587*	587571-1 587571-3	4 x 4 x 1/8 (102) x (102) x (3)
10-80B2	IR- 1N4587 IR- 1N4587	587571-1 587571-3	8 x 8 x 1/8 (203) x (203) x (3)
20-25B2	1N1183 1N1183*	587382-1 587382-6	3-1/2 x 3-1/2 x 1/8 (89) x (89) x (3.2)
20-50B2	IR- 1N4587 1N4587*	587571-1 587571-3	8 x 8 x 1/8 (203) x (203) x (3)
40-13B2	MR1121 MR1121R*	26-1046-2 26-1046-12	2-3/4 x 2-3/4 x 1/8 (70) x (70) x (3.2)
40-25B2	IR- 1N4587 1N4587*	587571-1 587571-3	5 x 5 x 1/8 (127) x (127) x (3)
60-9B2	MR1121 MR1121R*	26-1046-2 26-1046-12	3 x 3 x 1/32 (76) x (76) x (.8)
60-18B2	IR- 1N4587 1N4587*	587571-1 587571-3	4 x 4 x 1/8 (102) x (102) x (3)
80-6B2	MR1122 MR1122R*	26-1046-4 26-1046-14	1-3/4 x 1-3/4 x 1/32 (44) x (44) x (.8)
80-12B2	GE-1N1184A 1N1184AR	587382-2 587382-7	3-1/2 x 3-1/2 x 1/8 (89) x (89) x (3)
150-3B2	1N4141	587566-2	None Required
150-6B2	GE-1N1184A 1N1184AR	587382-3 587382-8	3 x 3 x 1/32 (76) x (76) x (.8)
300-1.5B2	1N4142	587566-3	None Required
300-3B2	GE-1N1204A 1N1204AR*	587393-3 587393-7	2 x 2 x 1/32 (51) x (51) x (.8)
600-.75B2	1N4144	587566-5	None Required
600-1.5B2	GE- 1N1206A 1N1206AR	587393-4 587393-8	2 x 2 x 1/32 (51) x (51) x (.8)

* Reverse-polarity rectifiers
** Flat aluminum plate

With POWER switches OFF, connect each unit to an appropriate input power source (115/208/220/230 Vac). All units in the sysem can be connected through a common ac line OFF/ON switch. Proceed as follows:

1. Set the COARSE and FINE CURRENT controls of each unit fully clock-wise.

2. Set the slave unit POWER switch to ON.

3. Set the master unit COARSE and FINE VOLTAGE controls fully counter-clockwise, and set its POWER switch to ON.

4. Adjust master unit controls for desired system output level, which, in the case of two identical units, will be twice that indicated on its panel meter.

NOTES

System output for series connected units of different power ratings will be the sum of the individual unit voltages, at a maximum current level equal to that of the lowest unit current rating. In multiple unit operation, a greater time lag must be anticipated to reach full system output at each power turn on.

3.6 ..... UNIT SHUTDOWN CIRCUIT

In the DCR-B2 line, shutdown is accomplished by connecting the remote shutdown terminal (11 of TB3) to the positive sense (terminal 1 of TB3). This connection may be metallic, (reed relay or wire) or may be a transistor or optical coupler. The device must sink approximately 2 mA from terminal 11, such that pin 11 drops below approximately 10 volts relative to (+) sense. The relay (or transistor) used for shutdown should be rated for 20V. Since the transistor will be connected to the (+) sense output, this device must be isolated (floating) such as through an opto-isolator. An example is in the master/slave connection of two DCR-B2 power supplies. If the shutdown function is adapted to the master unit, the system output goes to zero; if applied to the slave unit, only that unit is affected and the system output is reduced accordingly.

3.7 ..... OVP

The OVP is a fast-response silicon-controlled rectifier (SCR) crowbar circuit.

3.7.1 ..... OVP Adjustment

The OVP operating point is set as follows:

1. With OVP potentiometer R18 (accessible through hole in front panel) fully clockwise, set unit power to ON, and adjust front panel control to the desired trip point as indicated on the unit voltmeter. It is recommended that the OVP trip level be selected at least 10% higher than the desired operating level, to prevent nuisance trip-out.

2. Adjust R18 slowly counterclockwise until the OVP trips. Leave R18 in this position.

3. Set unit power to OFF, and turn front panel voltage control counter-clockwise away from the trip point.

4. Apply unit power and adjust the supply output voltage to the desired operating level.

3.7.2 ..... Cautions

CAUTION

Parallel operation requires protective diodes. See Figures 3-8 and 3-9.

CAUTION

If the DCR-B2 is used with an energy storage type of load (e.g., batteries or large capacitor or inductor banks) protective diodes must be used in series with the negative load lead as shown in Figures 3-8 and 3-9. This precaution <u>must</u> be taken to prevent energy stored in the external device or load being absorbed by the OVP crowbar SCR. Due to the limited energy capabilities of the SCR, damage could occur to the SCR and, perhaps, the load.

3.8 ..... CHANGEABLE CURRENT PROGRAMMING PARAMETERS

In the DCR-B2 Series, current programming parameters are changeable. There are two input ranges which are switch setable for the current mode signal voltage. The first is the standard 0-400mV input voltage and the second is a new range of 0-10V. These ranges are chosen by utilizing the SW1 switch located on Control Board Number 1063005. Switch positions for each input range are shown below.

Note that these are rocker switches and the OPEN/CLOSED condition is indicated by the black area of each switch. For example: SW1, 0-10V shows SW1-1 is OPEN, while SW1-2 and SW1-3 are CLOSED.

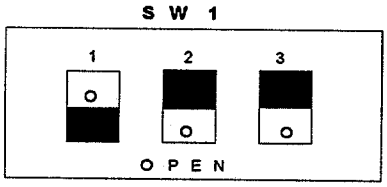

0 - 4 0 0 m V

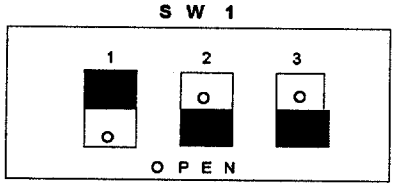

0 - 1 0 V

CAUTION

To prevent exceeding the input voltage range (per caution as stated in Section 3.3.2) check SW1 positioning before applying current mode signal programming voltage.