MANUAL # M360645

The Manuals in LP are intended for internal Elgar use only. When you print this manual some drawings may not be legible.
All drawings within the manuals are printed at 8 1/2 X 11. However you can download or print an 11 X 17 copy of each drawing from LP as needed.
Otherwise, contact Document Control for a hard copy manual if needed.

Sorensen

DCR-B2 SERIES

500-Watt &1000-Watt Power Supplies

Service Manual

Manual covers DCR-B2 models:

500-Watt	1000-Watt
10-40B2	**10-80B2**
20-25B2	**20-50B2**
40-13B2	**40-25B2**
60-9B2	**60-18B2**
80-6B2	**80-12B2**
150-3B2	**150-6B2**
300-1.5B2	**300-3B2**
600-.75B2	**600-1.5B2**

SORENSEN
Division of Elgar
9250 Brown Deer Road
San Diego, CA 92121-2294
1-800-525-2024
Tel: (858) 450-0085
Fax: (858) 458-0267
Email: sales@sorensen.com
www.sorensen.com

©2000 by Sorensen, Division of Elgar Electronics Corporation
This document contains information proprietary to Sorensen, Elgar Electronics Corporation. The information contained herein is not to be duplicated or transferred in any manner without prior written permission from Sorensen.

March, 2000

Document No. M360645 Rev E

SORENSEN FIVE–YEAR WARRANTY

Sorensen, a division of Elgar Electronics Corporation, warrants its products to be free from defects in material and workmanship. This warranty is effective for five years from the date of shipment of the product to the original purchaser. Liability of Sorensen under this warranty shall exist provided that:

- the Buyer exposes the product to normal use and service and provides normal maintenance on the product;
- Sorensen is promptly notified of defects by the Buyer and that notification occurs within the warranty period;
- the Buyer receives a Return Material Authorization (RMA) number from Sorensen's Repair Department prior to the return of the product to Sorensen for repair, phone 800-458-4258;
- the Buyer returns the defective product in the original, or equivalent, shipping container;
- if, upon examination of such product by Sorensen it is disclosed that, in fact, a defect in materials and/or workmanship does exist, that the defect in the product was not caused by improper conditions, misuse, or negligence; and,
- that Sorensen QA seal and nameplates have not been altered or removed and the equipment has not been repaired or modified by anyone other than Sorensen authorized personnel.

This warranty is exclusive and in lieu of all other warranties, expressed or implied, including, but not limited to, implied warranties of merchantability and fitness of the product to a particular purpose. Sorensen, its agents, or representatives shall in no circumstance be liable for any direct, indirect, special, penal, or consequential loss or damage of any nature resulting from the malfunction of the product. Remedies under this warranty are expressly limited to repair or replacement of the product.

CONDITIONS OF WARRANTY

- To return a defective product, contact a Sorensen representative or the Sorensen factory for an RMA number. Unauthorized returns will not be accepted and will be returned at the shipper's expense.
- For Sorensen products found to be defective within thirty days of receipt by the original purchaser, Sorensen will absorb all ground freight charges for the repair. Products found defective within the warranty period, but beyond the initial thirty-day period, should be returned prepaid to Sorensen for repair. Sorensen will repair the unit and return it by ground freight pre-paid.
- Normal warranty service is performed at Sorensen during the weekday hours of 7:30 am to 4:30 pm Pacific time. Warranty repair work requested to be accomplished outside of normal working hours will be subject to Sorensen non-warranty service rates.
- Warranty field service is available on an emergency basis. Travel expenses (travel time, per diem expense, and related air fare) are the responsibility of the Buyer. A Buyer purchase order is required by Sorensen prior to scheduling.
- A returned product found, upon inspection by Sorensen, to be in specification is subject to an inspection fee and applicable freight charges.
- Equipment purchased in the United States carries only a United States warranty for which repair must be accomplished at the Sorensen factory.

Sorensen

Committed to Quality...Striving for Excellence

TABLE OF CONTENTS

SECTION 1 THEORY OF OPERATION **PAGE**

1.1 INTRODUCTION 1

1.2 PHASE CONTROL PRINCIPLE 1

1.3 BLOCK DIAGRAM ANALYSIS (FIGURE 1-2) 3

1.4 DETAILED CIRCUIT DESCRIPTION 3

1.4.1 REFERENCE AND BIAS SUPPLIES 3

1.4.2 VOLTAGE MODE SECTION 4

1.4.3 CURRENT MODE SECTION 5

1.4.4 RAMP GENERATOR, RESET CIRCUIT AND COMPARATOR 5

1.4.5 BLOCKING OSCILLATOR CIRCUIT 6

1.4.6 TURN-ON AND SHUT-DOWN CIRCUIT 6

1.4.7 POWER SECTION 7

1.4.8 OVERVOLTAGE PROTECTOR 7

1.4.9 INDICATOR LAMPS 7

1.4.10 CHANGEABLE CURRENT PROGRAMMING PARAMETERS 8

SECTION 2 MAINTENANCE

2.1 GENERAL 9

2.2 PERIODIC SERVICING 9

2.3 TROUBLESHOOTING 9

2.4 CALIBRATION 9

2.5 PERFORMANCE TESTING 11

2.5.1 VOLTAGE MODE REGULATION AND RIPPLE 12

2.5.2 CURRENT MODE REGULATION 13

2.5.3 TRANSIENT RESPONSE 13

2.6 HI-POT TEST PROCEDURE 16

SECTION 3 DRAWINGS AND PARTS LISTS

3.1 GENERAL 17

3.1.1 CIRCUIT SYMBOL 17

3.1.2 SORENSEN PART NUMBER 17

3.2 REPLACEMENT PARTS LISTS 17

3.3 ASSEMBLY DRAWINGS (SEE ATTACHED) 17

LIST OF FIGURES

FIGURE	TITLE	PAGE
1-1	Phase Control Firing Angles	1
1-2	DCR-B2 Functional Block Diagram	2
1-3	Passing Stage Principle	4
2-1	Performance Test Setup	12

LIST OF TABLES

TABLE	TITLE	PAGE
2-1	DCR-B2 Troubleshooting	11
2-2	Sensing Resistor Values	14
2-3	Unit Calibration Specification	15

SECTION 1 THEORY OF OPERATION

1.1 INTRODUCTION

This section provides a basic discussion of unit operating principles, which may be used in conjunction with the troubleshooting chart provided in Section 3, to enable the logical and rapid isolation of unit faults. A brief description of the phase control principle is given first, followed by a block diagram analysis of system functions. The function of each section is then described in detail.

1.2 PHASE CONTROL PRINCIPLE

The sinusoidal wave in Figure 1-1 represents normal ac line voltage. If, by some means, conduction of this voltage is delayed, the average voltage output will be reduced. Control of the delay then results in control of the average voltage. This is phase control. The silicon controlled rectifier (SCR) acts like a switch, activated by the delay circuit, to provide the phase control. The delay is expressed in degrees and is known as the firing angle. Figure 1-1 shows firing angles of 60° and 120°.

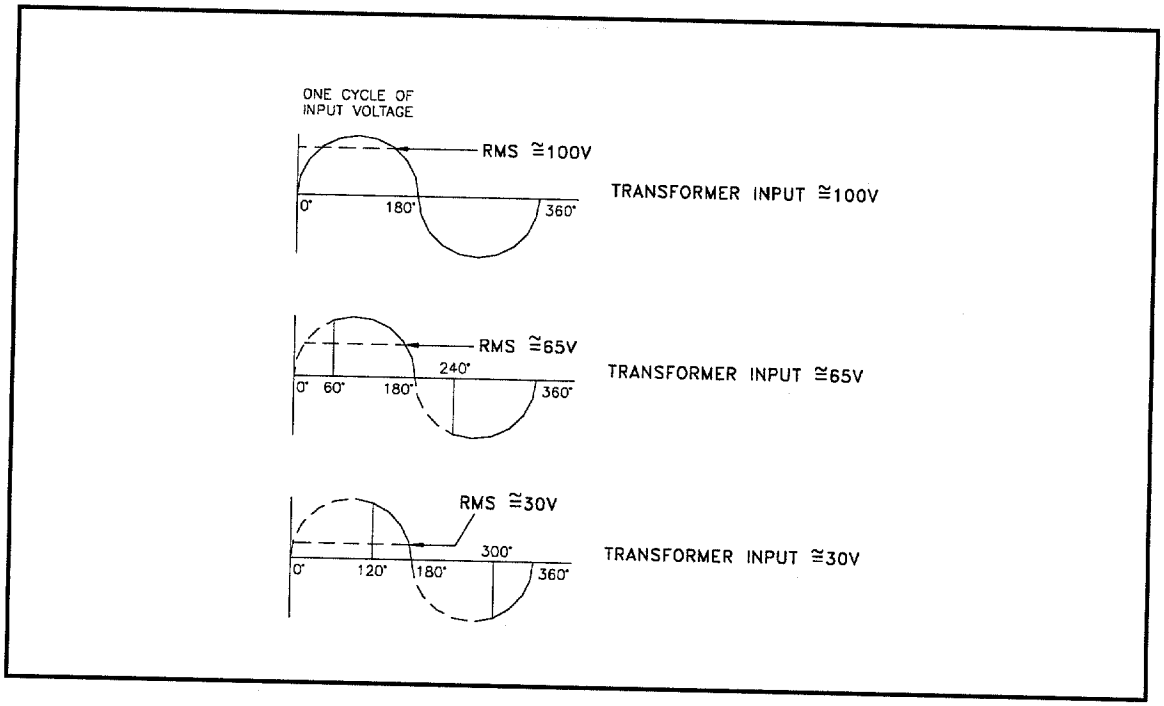

Figure 1-1 Phase Control Firing Angles

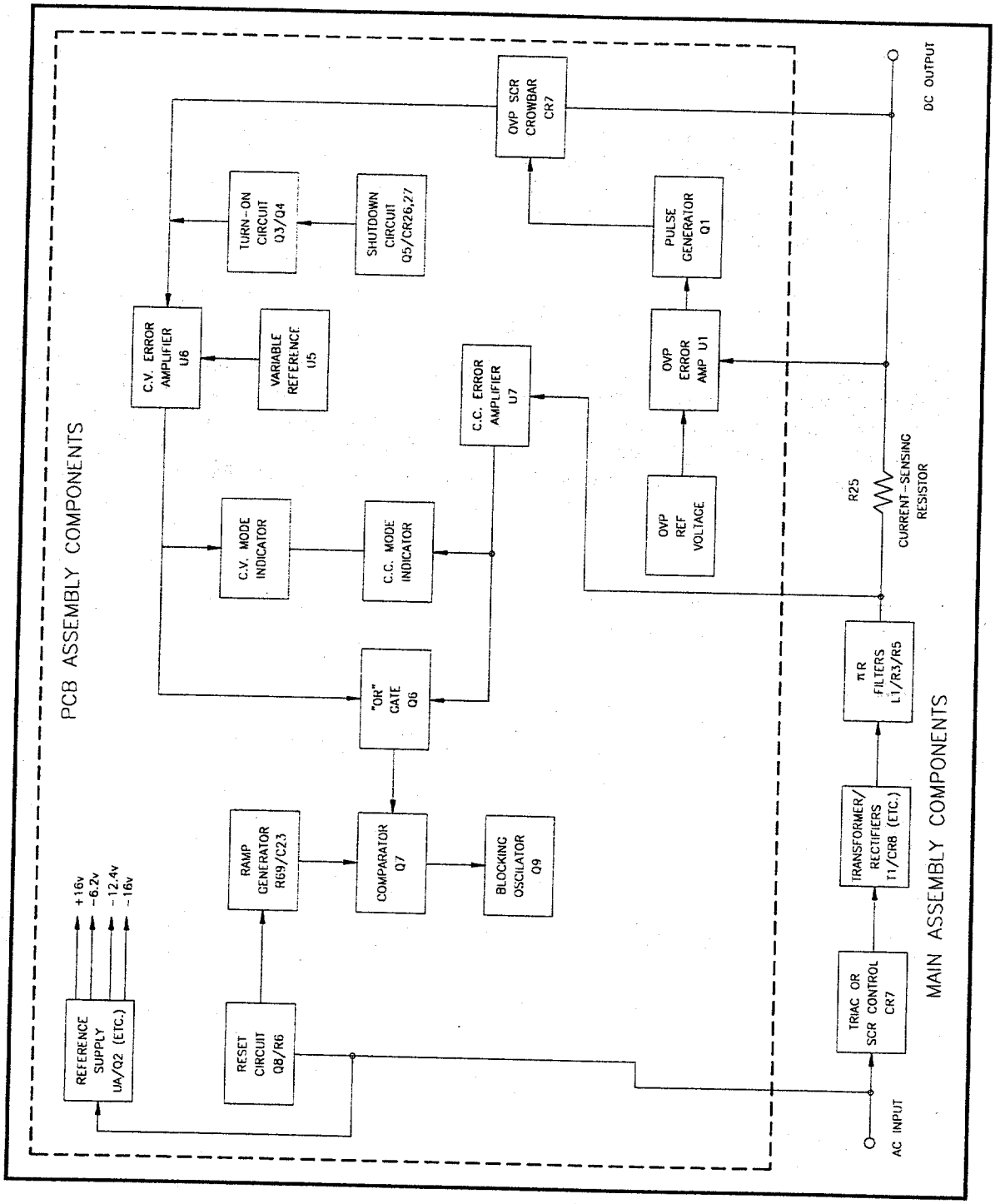

Figure 1-2 DCR-B2 Functional Block Diagram

1.3 ..... BLOCK DIAGRAM ANALYSIS (FIGURE 1-2)

The ac input voltage is first applied to CR7 (Triac), which is in series with power transformer T1. CR7 functions with the control circuits to form a feedback loop which prevents a change in output voltage when either the line or load changes.

To accomplish this, the control circuits issue a phase adjusted firing pulse to CR7 once during each half cycle of the input ac voltage. These circuits continuously sample the output voltage, which establishes the precise time at which the firing pulse is to be generated. The phase controlled ac voltage is stepped up or down by power transformer T1, and coupled through a full-wave rectifier and filtering circuits to the output terminals.

Feedback signals from the output back to CR7 originate in the constant voltage/current error amplifiers U6/U7. In the constant voltage mode, U6 continuously compares the supply output with a reference voltage generated by a variable reference programming circuit, (U5). A difference in these voltages appears as an error signal, which is delivered to amplifier U6. This dc error signal is applied to Q6 (comparator input #1). A sawtooth ramp voltage, generated by Q8, R69 and C23, is applied to Q7 (comparator input #2). The comparator output (across R62) sets the conduction angle of blocking oscillator Q9. The duration of Q9 conduction is directly proportional to the error signal, and its output triggers CR7 into conduction. CR7 acts as a switch, whose firing angle is dependent on the magnitude of dc error signal, thus controlling the overall supply output.

Similarly, in the constant current mode, changes in line or loadare sensed by R25, in series with the output. It is then amplified by U7, and applied to Q6 comparator input. Output control from this point is essentially the same as in the constant voltage analysis, above.

1.4 ....DETAILED CIRCUIT DESCRIPTION

NOTE
All component designators are referenced to PCB schematic diagram Figure 3-1 unless otherwise noted.

1.4.1 ....REFERENCE AND BIAS SUPPLIES

The precisely regulated voltage required for operation of the control circuitryis produced by a reference supply consisting ofzener diodes D5/D6, operational amplifier U4, passing stage Q2, transformer T2 and center-tapped full wave rectifier D35/D36/D37/D38. (See main schematic).

The reference supply output appears across a comparison bridge composed of divider R31/R32, D16, and R77. Error signals are sensed across this bridge and amplified by U4. The variable impedance characteristic of passing stage Q2 changes the level of absorbed voltage across the stage, maintaining the output at a precisely controlled negative 12.4 volts (Figure 1-3).

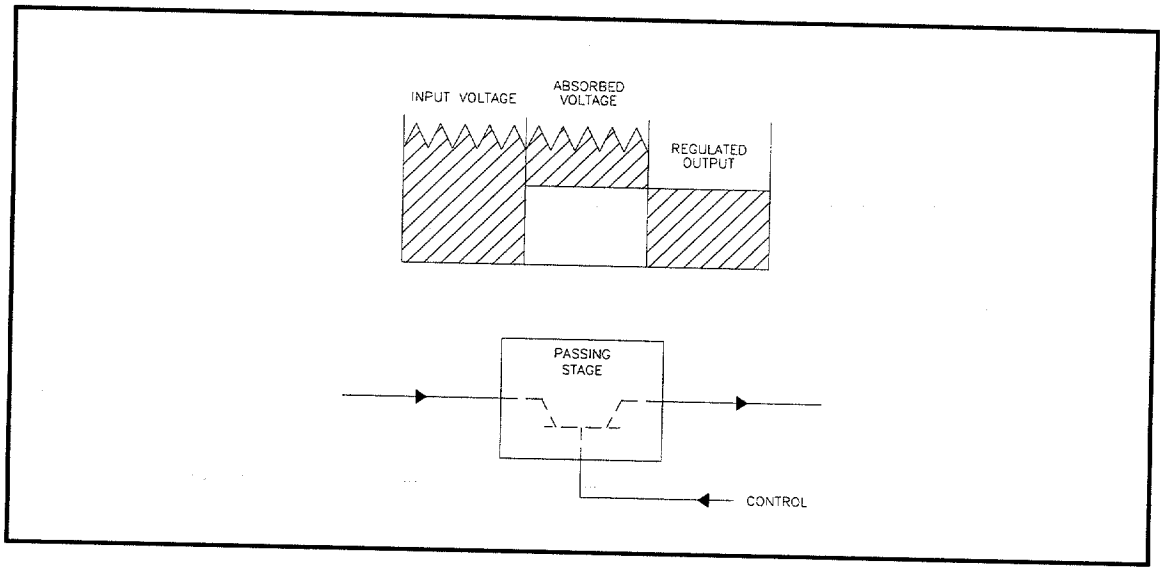

Figure 1-3 Passing Stage Principle

To illustrate circuit operation, assume an increase in the T2 (Figure 3-4) supply output. Pin 2 of U4 will become more negative, and the output at pin 6 more positive, tending to turn Q2 off. The reduction in drive current increases the impedance of Q2, and consequently its absorbed voltage, resulting in precise regulation of reference supply output.

Several other bias supplies are used to power the control circuitry:

1. +20 volts from D7. Note that there is no filtering on this 20 volt output. This signal is used as a time reference to the ac line. The +20 volt source is then gated through D21, and filtered by C18 to provide the +20 Vdc primary operating power for the control PCB.

2. The 20 volts across C18 is fed to R47 and D8, to create +16 volts for sections of the control circuitry. The +16 volts across D8 is then fed to R23 and D4 to generate and precisely regulate the +11.7V for the current amplifier reference voltage.

3. +30 Vdc unregulated (D35 and D37 on the overall schematic) is used to operate the current/voltage mode lamps, OVP control circuit, and remote current voltage select reference.

1.4.2 ..... VOLTAGE MODE SECTION

Primary components of this circuit include constant voltage error amplifier U6, variable reference voltage programmer U5, and emitter-follower stage Q6. The circuit functions as follows:

Pin 3 of U5 is connected to plus sense. Front panel voltage controls R10/R11 function as variable feedback resistances from U5 pin 6 to pin 2. The negative 12.4 volt reference through R39/38/37 establishes the desired programming current range, so that 0 to 10 volt signal is obtained at pin 6 of U5.

The main error amplifier is U6. Pin 4 of U6 is at virtual dc ground since pin 5 is at ground (+sense). Thus, the current through R74 can be varied from 0 to 1 milliampere. This current, through R79, programs the supply to the desired output. U6 pin 5 senses this output, and compares it to the voltage developed at U6 pin 4. The resultant is an error signal, amplified by U6, and coupled to R61 through the emitter of Q6.

An illustration of voltage mode operation An increase in system output drives U6 pin 4 more negative. U6 pin 11, and thus the Q6 emitter also become more negative, creating the error voltage necessary to retard the firing angle of CR7 through T1/Q9 action as noted in the block diagram analysis.

C15/R44 establishes ac loop stability, aided by C16/R45.

1.4.3 ..... CURRENT MODE SECTION

The primary component in this section is constant current amplifier U7. The 11.7V reference voltage is divided down by bridge dividers R20/R21 and R24/R19 to U7 pins 5 and 4 respectively. The resultant voltages are referenced to the positive output, through a current sensing resistor (R21), with R12/R13 serving as the front panel current adjust potentiometers.

R46/C17 establishes ac loop stability. C11/R36 (Variable) is a secondary stability network used for inductive load compensation.

R22/C7 acts to prevent rapid changes in the phase delay angle, caused by large transients. This protects the power components from overstress.

Trimmer R17 is used to adjust zero output current (compensating for current tolerances and offset voltage of U7).

Trimmer R18 is used to adjust for maximum current setting (compensating for tolerances in panel pot R12 and current shunt R25).

An illustration of current mode operation: If the output current approaches the current limit setting, the voltage across the sensing resistor becomes larger. This is seen as a positive error voltage at U7 pin 5, which is amplified and applied to the U7 output, pin 10. The output of U7, pin 10 (emitter) is passed through D20 to the base of the output stage of U7 at pin 13. The injected current causes the collector of U7, pin 11 to fall,reducing output. (See Voltage Mode section, para. 1.4.2, for additional details).

1.4.4 ..... RAMP GENERATOR, RESET CIRCUIT AND COMPARATOR

The ramp generator consists of R69 and C23. The ramp voltage at the junction of R69/C23 is coupled through D30 to the base of Q7. This voltage starts at a maximum level, and decreases exponentially until reset by Q8 at 8.3 millisecond intervals (each 1/2 cycle of line voltage). The reset pulse for Q8 is generated through D7/R48 as follows:

The reset circuit consists of Q8 and R68. The full wave rectified ac input from T2 is impressed across D7/R48. D7 clamps the base of Q8 at its zener level, keeping it shut off (D21 is forward biased). As the impressed voltage drops toward zero, the zener voltage follows. D21 becomes reverse biased. Q8 then turns on from base bias through R68, charging C23 when the line voltage crosses zero.

The comparator consists of Q7/Q6, D30, R61, and R62. Comparator Q7/Q6 compares the dc signal from either the voltage or current mode amplifier (applied to Q6) with the ramp generator voltage. The varying output of Q7 (across R62) establishes the conduction angle of blocking oscillator Q9.

1.4.5 ..... BLOCKING OSCILLATOR CIRCUIT

Q9 functions as a switch, providing the triggering voltage for D33 and D32 proportional to the error signal received from the comparator circuit. The blocking oscillator circuit functions as follows: Assume that at a given time the Q7 dc emitter voltage is several volts below the reference level provided by the reference supply circuit (paragraph 1.4.1). At a point when the ramp voltage, appearing at the base of Q7, is more negative than that on its emitter, Q7 conducts. This drives the base of Q9 positive, causing Q9 to conduct. As its collector current (Ic) increases, regenerative action occurs through pulse transformer T2, forcing Q9 into saturation. (Ic) continues to increase until T2 core saturates. Then T2 voltage decreases, removing Q9 base current. At this point Q9 comes out of saturation. The cycle is then repeated. The output of the pulse generator is a series of narrow pulses, continuing until the end of the line half-cycle.

1.4.6 .... TURN-ON AND SHUT-DOWN CIRCUITS

Primary components of the turn-on circuit are Q3, Q4, R56, R55, D28 and C22. Circuit operation is as follows: When power is initially applied to the unit, the bases of Q3/Q4 are driven positive, due to C22 coupling the rising voltage of the +16 volt bias supply. Q3 and Q4 are thus in saturation. The resultant negative voltage at the Q3/Q4 collector maintains voltage error amplifier U6 and the blocking oscillator/mixer circuits at cut off.

This action inhibits the output of the power supply from coming up. As C22 charges, the supply output will increase exponentially. Q3/Q4 gradually come out of saturation until the voltage across C22 reaches the point where theyare shut off. The supply is then functioning in its normal manner.

The shut-down circuit, consisting of Q5, R58, R59, and D26/D27, cuts off the unit output when the cathode of either diode is connected to the plus sense connection. The circuit function is to actuate Q5, which turns Q3 and Q4 on. When the connection is removed, the power supply returns to normal, with the slow start described above.

D27 (TB3 pin 11) is available for customer use to shut down the dc output. Terminal 11 can be connected to +sense (TB3 Term 1) by either an isolated relay contact or an open collector logic signal (sinking approximately 0.2mA).

D26 is used internally to shut down the DCR-B2 output when the OVP is tripped.

1.4.7 ..... POWER SECTION

The input ac voltage is applied to the primary of power transformer T1 through an SCR, (CR7). The output is rectified by a full wave bridge, and filtered by a Pi network with a damping resistor (R3). The filtered dcis then applied to the output terminals.

1.4.8 ..... OVERVOLTAGE PROTECTOR

The OVP consists of a fast-response silicon-controlled rectifier crowbar (CR8). A reference voltage (+12V) is generated by zener D1 and R3. This reference voltage is compared to the output voltage in a bridge circuit, by the ratio of R6 to R16 plus R18 (adjust pot). The bridge output is applied to U1, pins 3 and 4. Assume that the resistor ratio is set (by adjust pot R18) to produce a balanced bridge at a specified output voltage. If the output voltage exceeds this preset value, U41, pin 3will be driven positive relative to pin 4. The result is a positive output at pin 9 to turn on Q1. Q1 applies the +30V unregulated voltage to the primary of T1. The induced current in the secondary of T1 provides a trigger for the SCR crowbar. D12 activates the SCR, causing a crowbar function across the power supply output terminals.

The SCR recovers as soon as the output voltage is dropped, and removes the crowbar current. R5 supplies holding current to CR8 to hold the crowbar on.

To reset the OVP, power must be removed from the power supply input. After a moment to reset, lower the output voltage control, and reapply power to the input.

1.4.9 ..... INDICATOR LAMPS

DS2, which indicates Constant Voltage mode, is wired across P1-9 and P1-19 as shown on the Control PCB schematic, Figure 6-1. DS3, which indicates Constant Current mode, is wired across P1-9 and P1-19.

U8 is an operational amplifier used to drive DS2 and DS3. The lamps and U8 are powered from the +30V supply.

The input signal to U8 determines which lamp lights, as follows:

A. Constant Current Mode (Current Limit) DS3

The input terminals of U8 are pins 2 and 3. Pin 2 is driven positive relative to pin 3 when the current amplifier (U7) output (pin 10) is in control (i.e., during current mode operation). Pin 2 positive signal will drive U8 output (pin 6) low (towards the +30V return). Pin 6 acts to reduce the voltage on DS2 and increases the voltage on DS3. DS3 is turned on brightly and DS2 is turned off.

B. Constant Voltage Mode (DS2)

During Voltage Mode operation, U8 pin 2 polarity reverses due to loss of U7 pin 10 voltage, so that U8 pin 6 output is driven high (towards +30V). This turns on DS2 and turns off DS3.

1.4.10 .... CHANGEABLE CURRENT PROGRAMMING PARAMETERS

0-400 mV Operation:

Dual range current mode signal programming is controlled by SW1, U3, U2 and associated parts. The signal programming voltage is applied between TB3-8(+) and TB3-9() with the jumper between TB3-7 and TB3-8 removed. For 0-400mV signal control voltage, SW1-1 is closed. This directly connects TB3-8 to R17 as in the standard DCR-B2 current mode signal programming. SW1-2 and SW1-3 are open.

0-10V Operation:

For 0-10V signal control voltage, SW1 is open; SW2 and SW3 are closed. Thus, the input voltage goes to pin U3B-5 via R12 and R11. D3 and R12 limit the input voltage to 15V maximum. R11, R9, R10 and U3A (pins 1,2,&3) comprise an inverting amplifier with a gain of 20-25. The gain inverting amplifier is set so that the output at SW1-2 is equal to .4V with Vin=10V (approx. 24). As input voltage goes from 010V, the output voltage goes from 0-400mV.

U2 and associated parts allow the front panel control pots to output a variable voltage even when they are disconnected from the control circuitry,ie, TB3-8.

SECTION 2 MAINTENANCE

2.1 GENERAL

This section provides troubleshooting data, periodic servicing, calibration, performance and hi-pot testing procedures. The troubleshooting data should be used in conjunction with the schematic diagrams and Section 1 which outlines the principles of operation. Any questions pertaining to repair should be directed to the nearest Sorensen representative or to the factory. Include the model and serial numbers in any correspondence. Should it be necessary to return a unit to the factory for repair, prior authorization from Sorensen Company must be obtained.

2.2 PERIODIC SERVICING

Whenever a unit is removed from service, it should be cleaned, using naphtha or an equivalent solvent on painted surfaces, and a weak solution of soap and warm water for the front panel. Compressed air may be used to blow dust from in and around components.

2.3 TROUBLESHOOTING

Table 2-1 provides a list of malfunction symptoms along with a tabulation of the possible cause(s) for each symptom. Note that the failure of a single component may result in a chain reaction effect. As additional aids to troubleshooting, voltage checkpointshave been designated on the printed circuit schematic diagram.

2.4 CALIBRATION

Following repair, the unit should be recalibrated to insure that replacement components have not altered performance. Refer to Table 2-3 for unit calibration specifications. The following is the calibration procedure to ensure that full rated voltage output is available:

1. Make sure input power has been removed from unit and circuit breaker set to "OFF" position.
2. Set SW1 on PCB to "ON", "OFF", "OFF".
3. Adjust course voltage knob to midpoint and course current fully clockwise.
4. Set power to unit and turn circuit breaker "ON".
5. Check to see if output is approximately 1/2 rated voltage.
6. Adjust course voltage fully clockwise. With maximum voltage pot (R37 on PCB) adjust output voltage to 105% of rated.
7. Set output to rated voltage with four significant digits.
8. Set both course and fine current knobs fully counter clockwise.

9. Verify unit has gone from voltage mode to current mode by noting a significant drop in output voltage, by illumination of DS3.

10. Set fine current adjustment to midpoint and apply short circuit.

11. Using minimum current Adj. (R17 on PCB) adjust output current to exactly 0 amps.

12. Adjust fine current fully clockwise; slowly adjust course current fully clockwise.

13. Using maximum current Adj. (R18 on PCB) adjust output current to 115% of rated.

14. Turn circuit breaker "OFF".

15. Set SW1 to "OFF", "ON", "ON".

16. Turn course current knob counter clockwise fully.

17. Turn circuit breaker "ON".

18. Slowly Adj. course current knob fully clockwise.

19. With short circuit still applied, set current using 10V gain Adj. (R75 on PCB) to 115% of rated current.

20. Remove short circuit.

21. Turn unit "OFF". Reset SW1 to "ON", "OFF", "OFF".

22. Turn unit back "ON".

23 Apply rated load with rated voltage out.

24. With voltmeter (positive lead on inside of R21 and negative lead on cathode of D24) use R7 on front panel to set 400 MV, ±1%. Reset current meter with R6.

25. Apply pot lock to all pots, also R6 & R7.

26. Calibration complete.

Table 2-1 DCR-B2 Troubleshooting

1	No output (voltage mode)	a) Wrong input voltage b) Open fuses and circuit breaker* c) Reference voltages (check levels) d) Defective U6 or U5 e) Collector to emitter short on Q8, Q6, Q3, Q5 or Q4 f) Q9 open or shorted
2	Fuse opens or circuit breaker trips	a) CR7 shorted* b) Input capacitors shorted* c) D32, D33 shorted or open*
3	High output voltage (meter pointer pegs)	a) Sensing or programming leads or link open* b) Defective U6 or U5 c) Q7 shorted collector to emitter d) Q6 open collector to emitter e) CR7 shorted*
4	No output (current mode), or unit will not current limit	a) Defective U7 b) C7 shorted c) D20 open d) Shorted COARSE CURRENT potentiometer* e) Collector to emitter short on Q8, Q6, Q3, Q5 or Q4 f) Q9 open or shorted
5	Output oscillates (current mode)	a) Potentiometer R36 on unit PCB improperly adjusted

*Chassis components (ref. Figure 2-3)

2.5 ..... PERFORMANCE TESTING

Sensitive instruments like the DCR-B require rigorous testing methods if a true performance evaluation is to be made. Wherever possible, twisted leads should be used with test equipment to reduce stray pickup. At thepower supply terminal board, these leads must be firmly held by the terminal screws. Alligator clips and similar types of connectors are not suitable. Grounding techniques in which more than one device in the setup is grounded may introduce extraneous ripple that, although unrelated to the power output ripple, is displayed on the test oscilloscope.

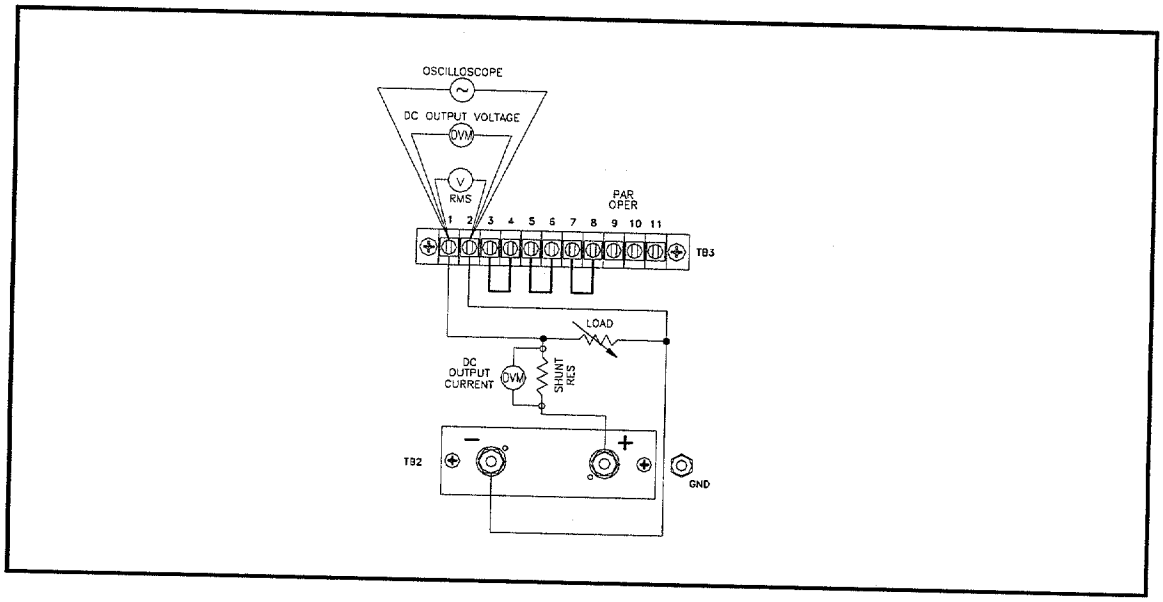

Figure 2-1 Performance Test Setup

2.5.1 .....Voltage Mode Regulation and Ripple

To check voltage mode regulation and ripple, proceed as follows:

1. Connect a sensitive digital voltmeter and an RMS ac voltmeter across unit output terminals per Figure 2-1. Select a current shunt per Table 2-2 with a DVM for current output readings.

   Use an autotransformer for AC line input with a current rating that exceeds the maximum unit input current called out in the unit specifications.

> **NOTE**
>
> Input devices such as autotransformers or line regulators can distort the input wave sufficiently to adversely affect performance measurements.

2. Apply high ac line input per specifications and remove load. Set the POWER switch to ON.

3. Rotate COARSE CURRENT control fully clockwise.

4. Use COARSE and FINE VOLTAGE controls to obtain rated output voltage. Note DVM reading after a few minutes of warm up time.

5. Decrease ac input voltage to low line specification. Output voltage change should not exceed limits specified in Table 2-3.

6. Close load switch and adjust load for rated current. Using high ac line specification and full load, verify ripple meets specification.

2.5.2 ..... Current Mode Regulation

To check current mode regulation, proceed as follows:

1. At no load, adjust output to maximum rated voltage, and set COARSE CURRENT control fully clockwise.

2. Connect a sense resistor (Table 2-2) or a precision meter shunt in series with a variable load across the output terminals.

3. Connect input power at low line per unit specifications. Apply load until rated current of supply is reached. (Unit has voltage mode indicated.) Adjust COARSE CURRENT control until CURRENT mode indicator is lit and output voltage drops at least 5% offull scale value.

4. Connect a digital voltmeter across the sensing resistor, and note the indication.

5. Increase input voltage until voltage is at high line, and reduce the load resistance to zero (short). Note indication on the DVM. Change in voltmeter reading (expressed in millivolts) should be divided by sense resistor value to obtain regulation in milliamperes. Limits are provided in Table 2-3.

2.5.3 ..... Transient Response

Test for transient response as follows:

1. Connect an oscilloscope across the unit output terminals.

2. Set unit POWER switch to ON. Adjust COARSE VOLTAGE control for rated output, and COARSE CURRENT control fully clockwise.

3. Apply half load, and then abruptly apply full load (or switch from full load to half load). Return to steady state operation should occur within 50 milliseconds (typical). See Table 2-3 for typical transient deviation voltage values.

NOTE

Load switching time should be less than 3 milliseconds.

Table 2-2

Sensing Resistor Values (Current Mode Regulation Check)

DCR MODEL	SENSE RESISTOR (Ohms)
10-40B2	0.01, 50W
10-80B2	.00625, 50W
20-25B2	0.01, 50W
20-50B2	.0200, 50W
40-13B2	0.01, 50W
40-25B2	.0400, 25W
60-9B2	0.1, 25W
60-18B2	.0556, 20W
80-6B2	0.1, 25W
80-12B2	.0833, 12W
150-3B2	0.1, 25W
150-6B2	.167, 6W
300-1.5B2	1.0, 10W
300-3B2	.333, 3W
600-.75B2	1.0, 10W
600-1.5B2	.333, 1W

Table 2-3
Unit Calibration Specifications

DCR Model	Regulation		Ripple Volt Mode (mV)	Transient Deviation (Volts)	Maximum Compliance (Vdc)	Cur. Mode Upper Lim. Set Pt. (A)
	Voltage Mode (mV)	Current Mode (mA)				
10-40B2	3	100	65	0.6	10	46
10-80B2	3	200	65	1.0	10	92
20-25B2	6	62.5	65	1.2	20	28.75
20-50B2	10	125	65	1.6	20	58
40-13B2	12	32.5	90	2.4	40	14.95
40-25B2	12	63	90	2.9	40	29
60-9B2	18	22.5	125	3.6	60	10.35
60-18B2	18	45	125	4.0	60	21
80-6B2	24	15	150	4.8	80	6.9
80-12B2	24	33	150	5.3	80	14
150-3B2	45	7.5	300	9.0	150	3.45
150-6B2	45	16	300	9.5	150	7.0
300-1.5B2	90	3.75	700	18	300	1.725
300-3B2	90	8	700	20	300	3.5
600-.75B2	180	2	1200	36	600	0.8625
600-1.5B2	180	4	1200	40	600	1.7

2.6 ..... HI-POT TEST PROCEDURE

High potential test procedures have been carefully carried out at the factory. These units are 100% tested and should not require further testing in the field.

CAUTION

High potential test can overstress or destroy the power semiconductors in this power supply if improperly applied.

Isolation measurements may be made using a standard VOM (Simpson 260 or equivalent) on the highest resistance scale available.

If it is essential to use the high potential test method, please contact the factory for information on special precautions that should be taken.

CAUTION

Sorensen Company cannot be held liable for any malfunctions resulting from the application of a high potential test (greater than 100V). See standard Sorensen Company warranty.

SECTION 3 _____ DRAWINGS AND PARTS LISTS

3.1 ..... GENERAL

This manual contains schematic diagrams, PCB parts location drawings, and replaceable parts lists. The parts lists are keyed to the applicable schematic diagrams, and assembly drawings by the Reference Designator and Item Number.

3.1.1 ..... Circuit Symbol (Reference Designator)

This is an alpha-numeric identification of the component as called out on the unit drawings.

3.1.2 ..... Sorensen Part Number

The Sorensen part number should be used when ordering parts directly from:

Sorensen
Sales & Technical Support
9250 Brown Deer Road
San Diego, CA 92121-2294
1-800-525-2024
Tel: (858) 450-0085
Fax: (858) 458-0267
Email: sales@sorensen.com
www.sorensen.com

3.2 ..... REPLACEMENT PARTS LISTS (See Attached)

3.3 ..... ASSEMBLY DRAWINGS (See Attached)

DRAWING #		DESCRIPTION
500 WATT	1000 WATT	
M360646	M360646	REPLACEMENT PARTS LIST
1063996	1063996	DWG OUTLINE
1064093	1064377	SCHEMATIC, UNIT
1063006	1063006	SCHEMATIC, CONTROL PCB
1063829	1064371	FINAL ASSY
	1064436	BASE ASSY
1063513	1063513	FRONT PANEL ASSY
1064468	1063514	REAR PANEL ASSY
1063005	1063005	CONTROL PCB ASSY
1063865	1063865	CAP ASSY
1063518	1063518	POT ASSY

NOTES: UNLESS OTHERWISE SPECIFIED.

1. ASSEMBLE PER ELGAR WORKMANSHIP STANDARD DOCUMENT NO. 0050003-01.

2. TORQUE ALL POTENTIOMETERS IN POSITION SHOWN 10 IN-LBS.

REVISIONS				
ZONE	REV	DESCRIPTION	DATE	APPROVED
	A	PROD REL PER 89A340 AR	10/13/89	S.A.
	B	REV PER ECN N950370	5/10/95	

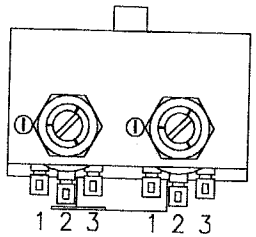

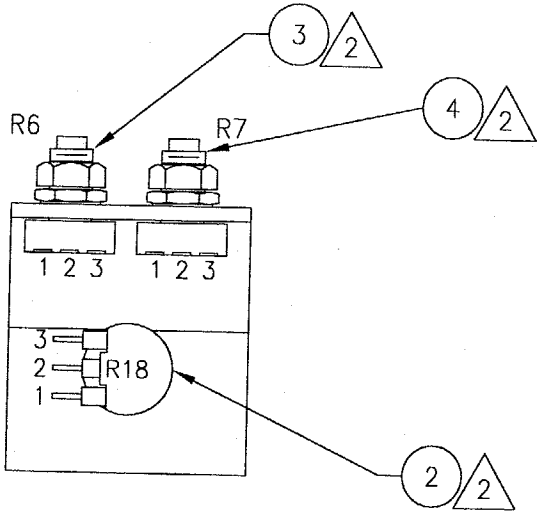

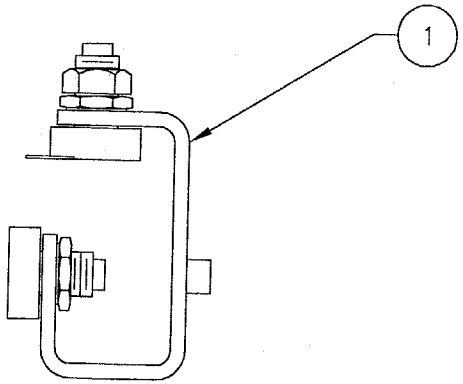

SEE SEPARATE PARTS LIST: 1063518-1 THRU -8

NEXT ASSY.	USED ON
–	–
–	–
–	–
–	–
–	–
–	–
–	–
–	–

APPLICATION

THE INFORMATION DISCLOSED HEREIN WAS ORIGINATED BY AND IS THE PROPERTY OF ELGAR CORPORATION, AND EXCEPT FOR RIGHTS EXPRESSLY GRANTED TO THE UNITED STATES GOVERNMENT, ELGAR CORPORATION RESERVES ALL PATENT, PROPRIETARY, DESIGN, USE, SALE, MANUFACTURING AND REPRODUCTION RIGHTS THERETO.

UNLESS OTHERWISE SPECIFIED DIMENSIONS ARE IN INCHES
TOLERANCES ON
DECIMALS .XX ± .03 .XXX ±.010
FRACTIONS ± 1/32
ANGLES ± 1/2°
DO NOT SCALE THIS DRAWING

MATERIAL:

FINISH:

CONTRACT NO.
FIRST MADE FOR:

APPROVAL		DATE
DRAWN	A. RUDIN	8/28/89
CHECKED	–	–
ENGINEER	–	–
QA-REL	–	–

SEE DOCUMENT CONTROL FOR ORIGINAL SIGNATURES

ELGAR

DWG ASSY BKT

SIZE	CODE IDENT. NO.	DWG. NO.	REV
B		1063518	B

SCALE 1/1 SHEET 1 OF

1063518

NOTES: UNLESS OTHERWISE SPECIFIED.

1. ASSEMBLE PER ELGAR WORKMANSHIP STANDARD DOCUMENT NO. 0050003-01.

2. ITEM 3 USED ONLY ON 1063865-4 AND -5.

3. REMOVE PROTECTIVE COVERING FROM INSULATED SURFACE OF PLATE BEFORE INSTALLING CAPACITORS ON ITEM #1.

4. DO NOT USE HARDWARE SUPPLIED WITH CAPACITORS.

5. SECURE CAPACITORS WITH TIEWRAPS WITHOUT DISTORTING CAPACITOR CASE. DO NOT OVER TIGHTEN.

6. TORQUE AS SPECIFIED ± 1 IN-LBS. OR 10% WHICHEVER IS GREATER.

6.1 23 IN-LBS.

7. INSTALL NUTS FINGER TIGHT.

ZONE	REV	DESCRIPTION		DATE	APPROVED
	A	REL TO PROD EO 89A340	AR	9/22/89	
	B	REV PER EO 89A354	AR	10/26/89	
	C	REV PER EO 89A398	AR	11/17/89	
	D	REV PER EO 90A130	AR	3/9/90	
	E	REV PER EO 90A198	AR	4/4/90	
	F	REV PER EO 90A272	AR	4/27/90	
	F1	CHANGE DASH LEVELS NO EO	AR	7/27/90	
	G	REV PER EO 90A591	AR	8/9/90	
	H	REV PER EO 90A639	AR	8/17/90	
	I	REV PER ECO 90A753	JK	11/08/90	
	J	REV PER ECO 91A358	AR	8/29/91	
	K	REV PER ECN N950370	MS	5/10/95	
	L	REVISED PER ECN N950847	RAC	11/21/95	ML

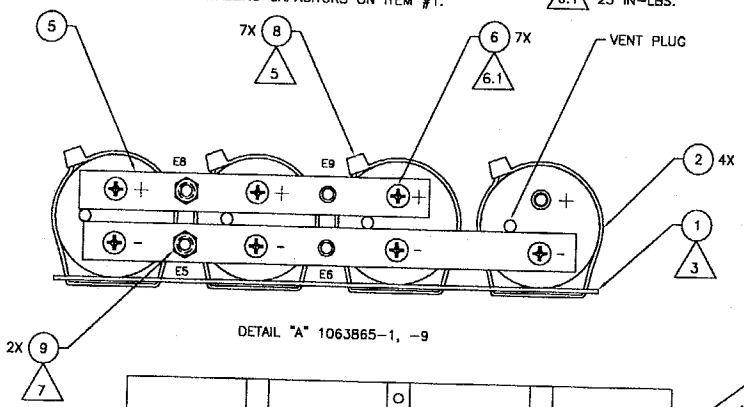

DETAIL "A" 1063865-1, -9

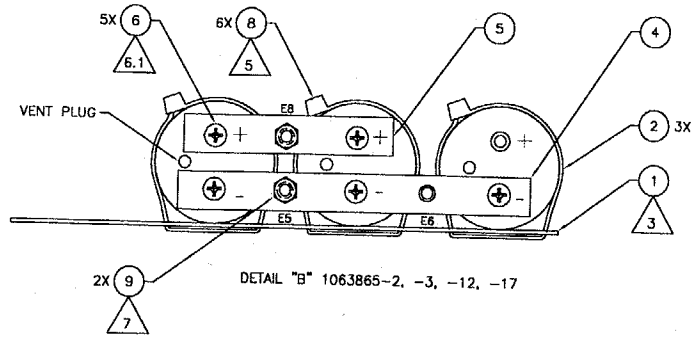

DETAIL "B" 1063865-2, -3, -12, -17

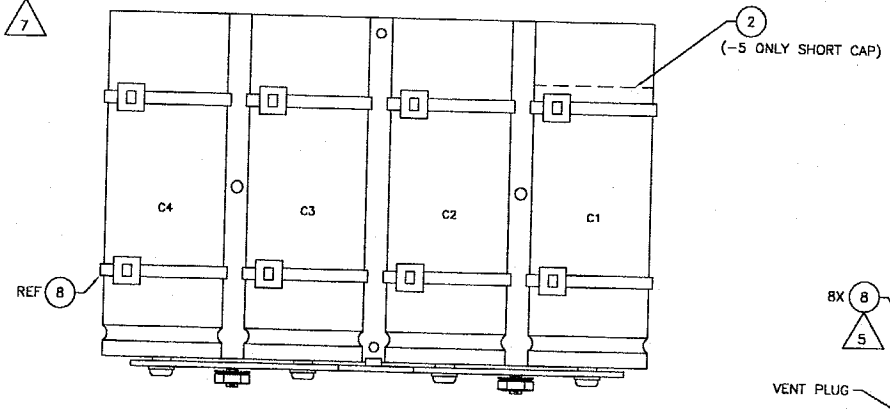

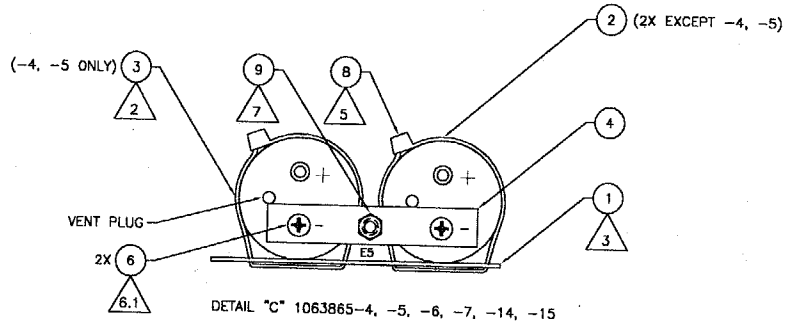

DETAIL "C" 1063865-4, -5, -6, -7, -14, -15

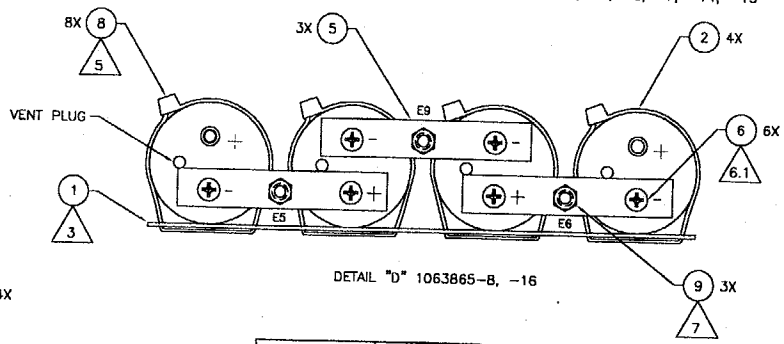

DETAIL "D" 1063865-8, -16

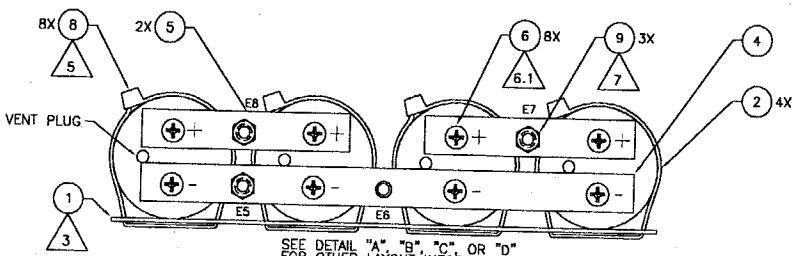

SEE DETAIL "A", "B", "C", OR "D" FOR OTHER LAYOUT INFORMATION. USED ON -10, -11, -13

SEE SEPARATE PARTS LIST

NEXT ASSY.	USED ON
APPLICATION	

THE INFORMATION DISCLOSED HEREIN WAS ORIGINATED BY AND IS THE PROPERTY OF ELGAR CORPORATION, AND EXCEPT FOR RIGHTS EXPRESSLY GRANTED TO THE UNITED STATES GOVERNMENT, ELGAR CORPORATION RESERVES ALL PATENT, PROPRIETARY, DESIGN, USE, SALE, MANUFACTURING AND REPRODUCTION RIGHTS THEREIN.

UNLESS OTHERWISE SPECIFIED DIMENSIONS ARE IN INCHES
TOLERANCES ON
DECIMALS .XX ± .03 .XXX ± .010 FRACTIONS ± 1/32 ANGLES ± 1/2°
DO NOT SCALE THIS DRAWING

MATERIAL: –

FINISH: –

CONTRACT NO.
FIRST MADE FOR:

APPROVAL		DATE
DRAWN	A. RUDIN	8/22/89
CHECKED		
ENGINEER		
QA-REL		

SEE DOCUMENT CONTROL FOR ORIGINAL SIGNATURES

ELGAR

DWG ASSY, CAP

SIZE	CODE IDENT. NO.	DWG. NO.	REV
D	25965	1063865	L

SCALE 1/1 SHEET 1 OF 1

1063865

REVISIONS				
ZONE	REV	DESCRIPTION	DATE	APPROVED
	A	ORIGINATED	890412	
	B	REVISED	890512	
	C	REVISED	890907	
	D	REVISED PER ECO 89A377	891116	
	E	REVISED PER ECO 92A148	920420	
	F	REVISED PER ECO 92A537	921002	
	G	REVISED PER ECO 92A713	921106	
	H	REVISED PER ECO 92A242	940630	
	J	REVISED PER ECN N940122	941213	
	K	REV PER ECN N940147	950510	
	L	REV PER ECN N950370	950512	
	M	REV PER ECN N950374 DR	950602	ML
	N	REVISED PER ECN #N960079	02/05/96	ML
	P	REVISED PER ECN #N960100	03/11/96	ML
	R	REVISED PER ECN #N960165	04/29/96	ML
	T	REVISED PER ECN #N981232	12/4/98	STAPP

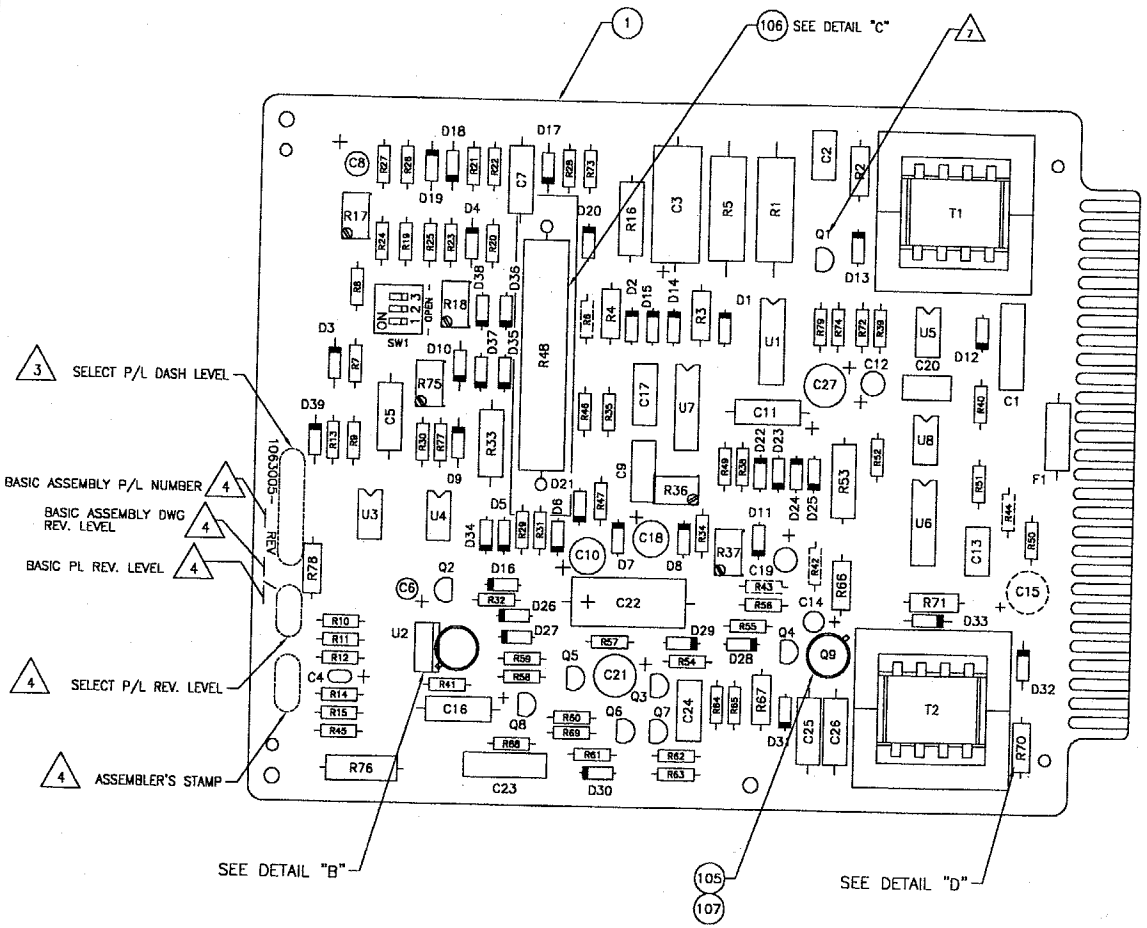

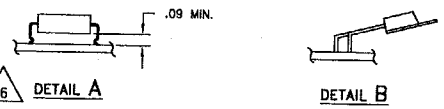

NOTES: UNLESS OTHERWISE SPECIFIED.

1. ASSEMBLE PER ELGAR WORKMANSHIP STANDARD DOCUMENT NO. 0050003-01.
2. REFERENCE SCHEMATIC NUMBER 1063006
3. ELECTRICAL COMPONENTS ARE KEYED TO PARTS LIST BY REFERENCE DESIGNATORS
4. INK STAMP APPROPRIATE REVISION LEVEL USING BLACK EPOXY INK
5. COMPONENTS SHOWN DASHED ARE TO BE INSTALLED AT ANOTHER ASSEMBLY DASH LEVEL MASK HOLES, MUST BE KEPT SOLDER FREE
6. COMPONENTS 2W OR LARGER MUST BE ELEVATED WITH FORMED LEADS RESISTORS AFFECTED ARE R1,R4, R5, R16, R33, R48, R53 AND R76, AND F1 ALSO (SEE DETAIL A)
7. REMOVE Q1 ON -XM61 VERSION.
8. ELECTROSTATIC DISCHARGE CONTROL PROGRAM FOR PROTECTION OF ELECTRICAL AND ELECTRONIC PARTS, ASSEMBLIES AND EQUIPMENT PER IP 0460007-01.

SEE SEPARATE PARTS LIST : 1063005-XXX

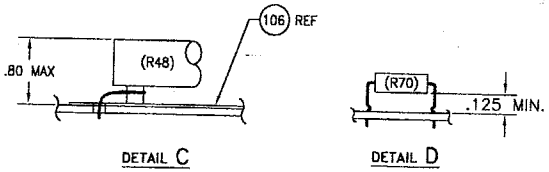

CAUTION
SENSITIVE ELECTRONIC COMPONENTS

NEXT ASSY.	USED ON
APPLICATION	

THE INFORMATION DISCLOSED HEREIN WAS ORIGINATED BY AND IS THE PROPERTY OF ELGAR CORPORATION, ARE EXCEPT FOR RIGHTS EXPRESSLY GRANTED TO THE UNITED STATES GOVERNMENT. ELGAR CORPORATION RESERVES ALL PATENT, PROPRIETARY, DESIGN, USE, SALE, MANUFACTURING AND REPRODUCTION RIGHTS THEREIN.

UNLESS OTHERWISE SPECIFIED DIMENSIONS ARE IN INCHES
TOLERANCES ON
DECIMALS .XX ± .03 .XXX ± .010 | FRACTIONS ± 1/32 | ANGLES ± 1/2°
DO NOT SCALE THIS DRAWING

MATERIAL:

FINISH:

CONTRACT NO.
FIRST MADE FOR:

APPROVAL		DATE
DRAWN	V. ANDERSON	890412
CHECKED	J.R. MARCH	890525
ENGINEER		
QA-REL		

ELGAR

ASSEMBLY, PCB
DCRB CONTROL BOARD

SIZE	CODE IDENT. NO.	DWG. NO.	REV
D	25965	1063005	T

SCALE 2/1 SHEET 1 OF 1

NOTES: UNLESS OTHERWISE SPECIFIED.

1. ASSEMBLE PER ELGAR WORKMANSHIP STANDARD DOCUMENT NO. 0050003-01.
2. R20 AND R26 (ITEMS 5 AND 29) ARE USED ON -7 AND -8 MODELS ONLY.
3. TEXT IN PARENTHESES () REFERENCES WIRE LISTS AND SCHEMATICS.
4. BOTH NUTS: FINGER TIGHT.

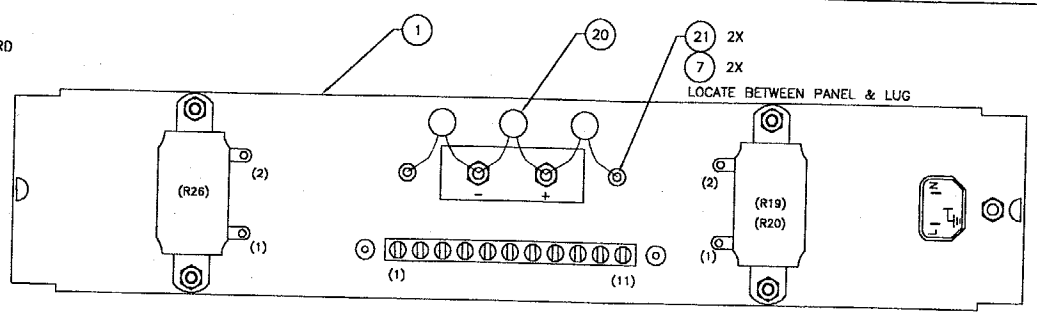

INSIDE VIEW

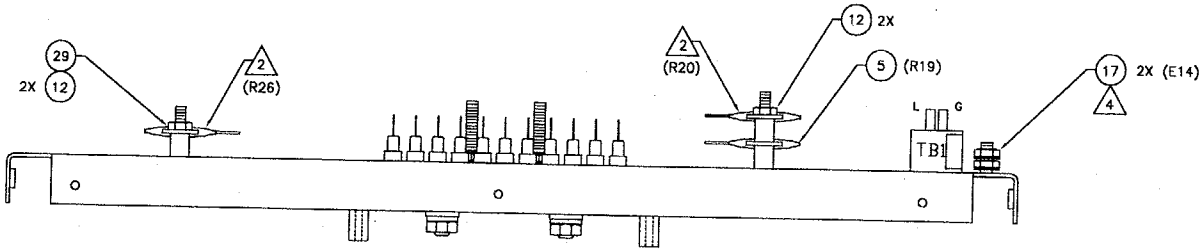

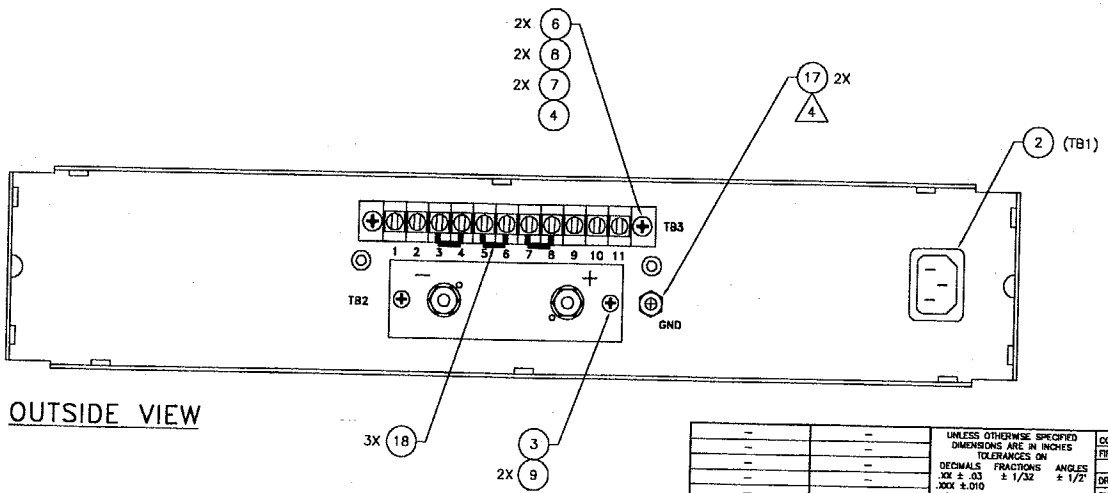

OUTSIDE VIEW

SEE SEPARATE PART LISTS: 1064468-1 THRU -8

REVISIONS

ZONE	REV	DESCRIPTION		DATE	APPROVED
	A	REL TO MANUFAC.	AR	8/6/90	
	B	REL PER ECO 91A	WMS	4/30/91	
	C	REV PER ECO 91A169	DJ	9/27/91	
	D	REV PER ECO 92A454	JIM	8/27/92	
	E	REV PER ECO 92A627	DM	10/12/92	
	F	REV PER ECO 94A242	AR	6-30-94	
	G	REVISED PER ECN N940122	RC	941214	
	H	REVISED PER ECN N950370	MS	5/10/95	
	J	REVISED PER ECN N950818	RAC	11/21/95	
	K	REVISED PER ECN N970377	BO	5/12/97	

NEXT ASSY.	USED ON
APPLICATION	

THE INFORMATION DISCLOSED HEREIN WAS ORIGINATED BY AND IS THE PROPERTY OF ELGAR CORPORATION, AND EXCEPT FOR RIGHTS EXPRESSLY GRANTED TO THE UNITED STATES GOVERNMENT, ELGAR CORPORATION RESERVES ALL PATENT, PROPRIETARY, DESIGN, USE, SALE, MANUFACTURING AND REPRODUCTION RIGHTS THERETO.

UNLESS OTHERWISE SPECIFIED DIMENSIONS ARE IN INCHES
TOLERANCES ON
DECIMALS .XX ± .03 .XXX ±.010 FRACTIONS ± 1/32 ANGLES ± 1/2°
DO NOT SCALE THIS DRAWING

MATERIAL:

FINISH:

CONTRACT NO.
FIRST MADE FOR:

APPROVAL		DATE
DRAWN	A. RUDIN	4/18/90
CHECKED		
ENGINEER		
QA-REL		

SEE DOCUMENT CONTROL FOR ORIGINAL SIGNATURES

ELGAR

DWG ASSY
REAR PANEL

SIZE	CODE IDENT. NO.	DWG. NO.	REV
D	25965	1064468	K

SCALE 1/1 SHEET 1 OF 1

1064468

ZONE	REV	DESCRIPTION		DATE	APPROVED
	A	REL TO PROD. EO 89A340	AR	9/19/89	
	B	REV PER EO 89A354	AR	10/25/89	
	C	REV PER EO 89A364	AR	11/7/89	
	D	REV PER EO 90A030	AR	1/18/90	
	E	REV PER EO 91A275	AR	7/18/91	CB
	F	REV PER ECN N950370	MS	5/10/95	
	G	REV PER ECN N950802	BC	10/20/95	ML

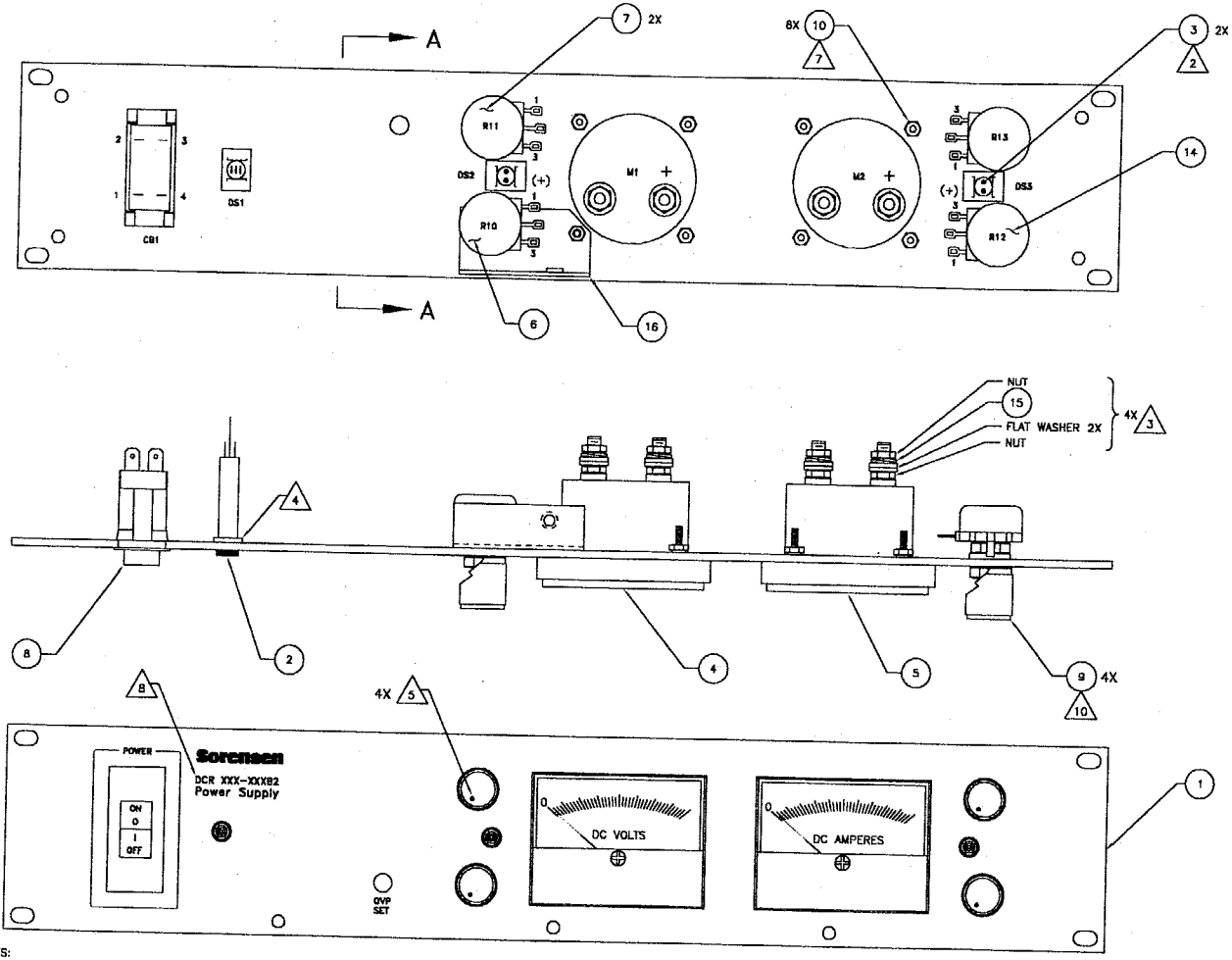

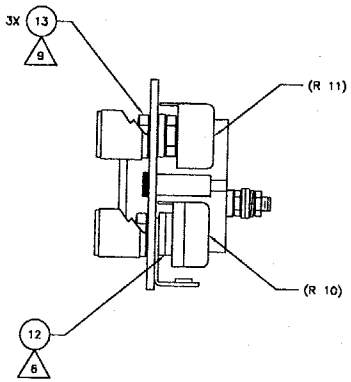

VIEW A-A

NOTES:

1. ASSEMBLE PER ELGAR WORKMANSHIP STANDARD DOCUMENT NO. 0050003-01.
2. RED PIN ON DS2 & DS3 INDICATES "+".
3. HARDWARE SUPPLIED WITH METERS EXCEPT ITEM #15. TORQUE BOTTOM NUT 10 IN-LBS FINGER TIGHT TOP NUT.
4. MOUNT DS1, DS2, DS3 TIGHT USING SUPPLIED CLIP TO ELIMINATE ROTATION.
5. WHITE DOT ON KNOB MUST BE AT 7 O'CLOCK POSITION WITH POTENTIOMETER FULLY COUNTER CLOCKWISE.
6. HARDWARE SUPPLIED WITH POTENTIOMETER EXCEPT ITEM #12.
7. DO NOT USE VENDOR SUPPLIED MTG. HARDWARE.
8. MODEL NUMBER NOT SHOWN.
9. HARDWARE SUPPLIED WITH POTENTIOMETER EXCEPT ITEM #13. TORQUE NUT 10 IN-LBS; DO NOT SCRATCH FRONT PANEL WHILE INSTALLING NUT.
10. .03 GAP BETWEEN KNOB AND FRONT PANEL.

FOR LIST OF PARTS SEE 1063513-XX

NEXT ASSY.	USED ON
APPLICATION	

THE INFORMATION DISCLOSED HEREIN WAS ORIGINATED BY AND IS THE PROPERTY OF ELGAR CORPORATION, AND EXCEPT FOR RIGHTS EXPRESSLY GRANTED TO THE UNITED STATES GOVERNMENT, ELGAR CORPORATION RESERVES ALL PATENT, PROPRIETARY, DESIGN, USE, SALE, MANUFACTURING AND REPRODUCTION RIGHTS THERETO.

UNLESS OTHERWISE SPECIFIED DIMENSIONS ARE IN INCHES
TOLERANCES ON
DECIMALS .XX ± .03 .XXX ± .010 — FRACTIONS ± 1/32 — ANGLES ± 1/2°
DO NOT SCALE THIS DRAWING

MATERIAL:

FINISH:

CONTRACT NO.
FIRST MADE FOR:

APPROVAL		DATE
DRAWN	A. RUDIN	6/19/89
CHECKED		
ENGINEER		
QA-REL.		

SEE DOCUMENT CONTROL FOR ORIGINAL SIGNATURES

ELGAR

ASSY FRNT PANEL
DCRB 3.5"

SIZE	CODE IDENT. NO.	DWG. NO.	REV
D	25965	1063513	G

SCALE FULL — SHEET 1 OF 1

1063513

ZONE	REV	REVISIONS DESCRIPTION	DATE	APPROVED
		SEE SHEET 1		

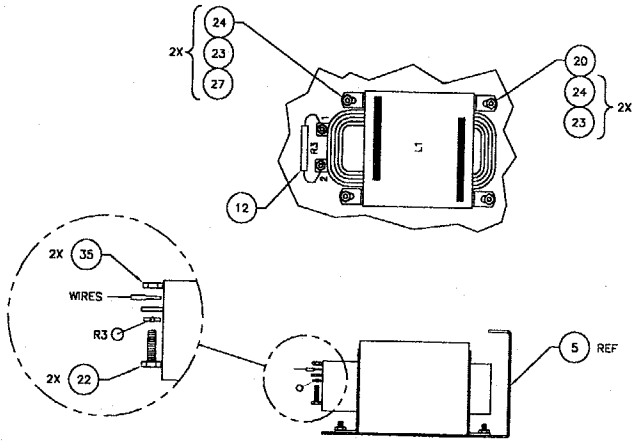

VIEW C [1 5/B]
SCALE: 1/1

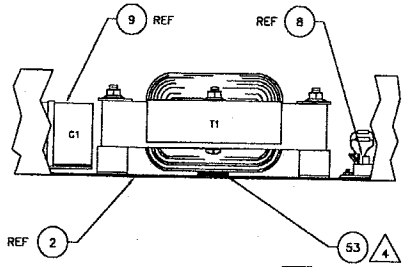

VIEW F-F [1 7/C]
ROTATED AS REQUIRED

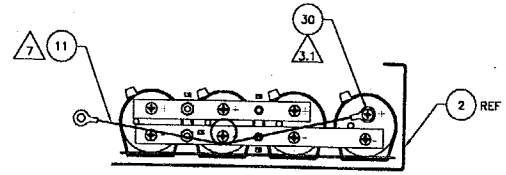

(MODEL 10-40)

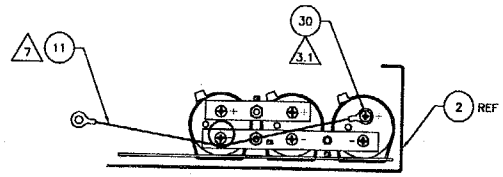

(MODELS 20-25 & 40-13)

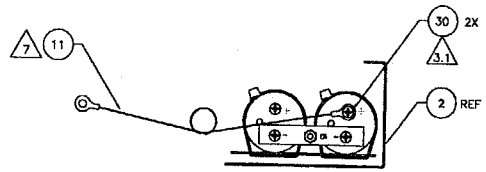

(MODELS 60-9, 80-6, 150-3 & 300-1.5)

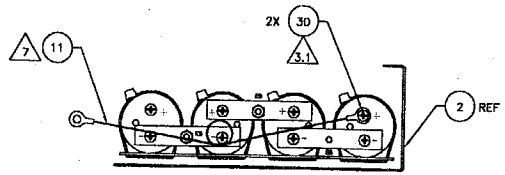

(MODEL 600-.75)

VIEW E-E [1 7/C]
ROTATED AS REQUIRED

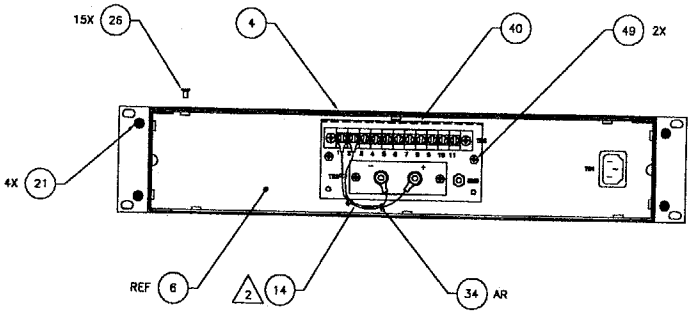

VIEW D-D [1 8/C]
ROTATED AS REQUIRED

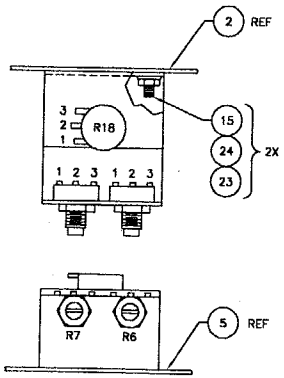

VIEW B [1 6/A]
SCALE: 1/1

SIZE	CODE IDENT. NO.	DWG. NO.	REV
D	25965	1063829	U
SCALE 1/2		SHEET 2 OF 2	

1063829

NOTES: UNLESS OTHERWISE SPECIFIED.

1. ASSEMBLE PER ELGAR WORKMANSHIP STANDARD DOCUMENT NO. 0050003-01.
2. FOR WIRING TERMINATIONS OF ITEM 13 & 14, SEE TABLE 1.
3. TORQUE AS SPECIFIED ±1 IN-LBS OR 10% WHICHEVER IS GREATER.
   - 3.1 10 IN-LBS.
4. ALIGN UP TO 3 PIECES OF ACRYLIC FOAM (APPROX. 1" SQ.) ON TOP OF EACH OTHER AND STICK ONTO THE CHASSIS RIB, CENTERED UNDER TRANSFORMER.
5. USE ON -7 (300-1.5), & -8 (600-.75) ONLY.
6. APPLY SPOT OF RTV TO P2 CHASSIS.
7. LOCATE SHUNT ASSY FROM C1 (+) TO TB2 (+).
8. USE ON -1 (10-40), -2 (20-25) & -8 (600-.75) ONLY.
9. APPLY A THIN LAYER OF THERMAL GREASE, ITEM 39 BEFORE INSTALLATION OF THE RECTIFIER, ITEM 18.

ZONE	REV	DESCRIPTION		DATE	APPROVED
	N	REDRAW FOR CLARITY	RC	5/1/95	
	P	REV PER ECN N950370	MS	5/10/95	
	R	REV PER ECN N950309	DR	8/2/95	ML
	T	REV PER ECN N950619	DR	9/18/95	ML
	U	REVISED PER ECN N010606	EM	4/12/02	G. Stapp

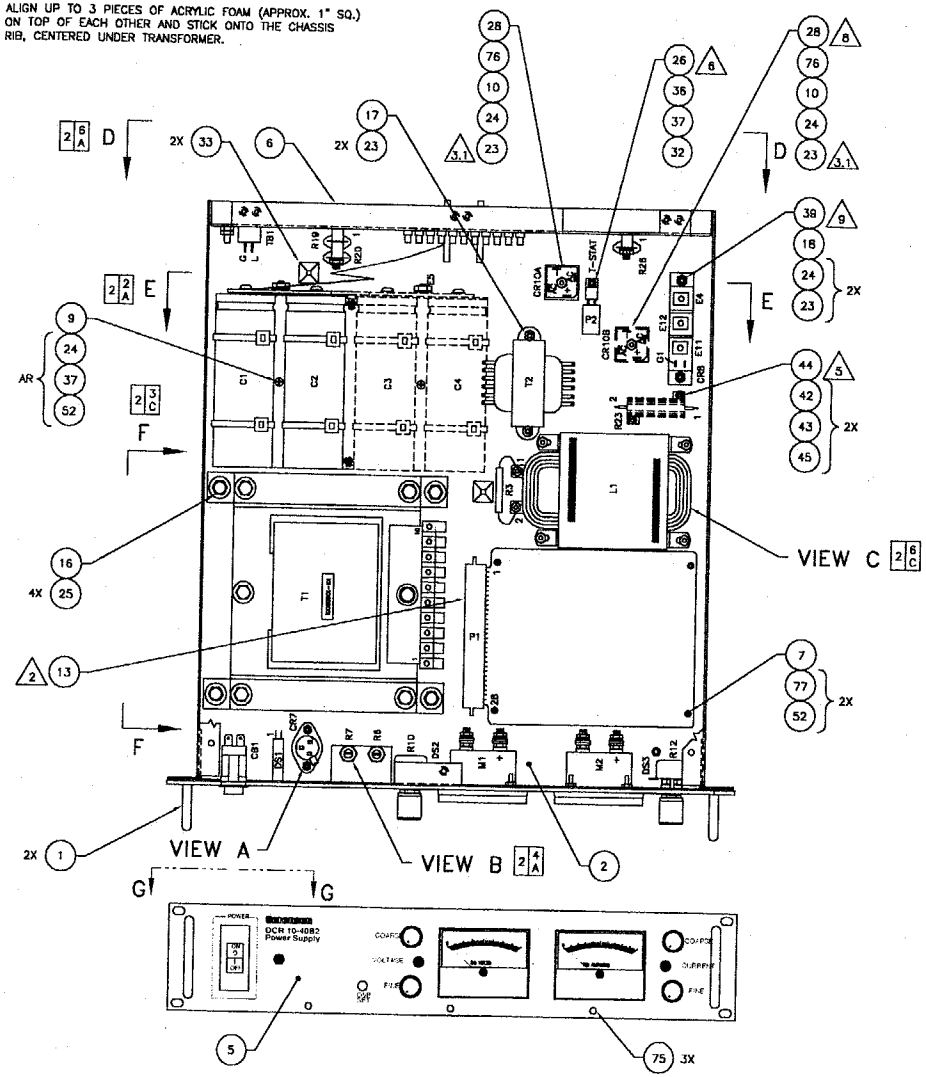

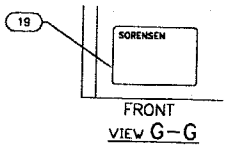

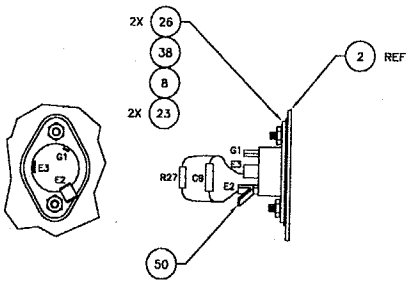

TABLE 1

MODEL	WIRING DIAGRAM
10-40	W360176-01
20-25	W360177-01
40-13	W360177-01
60-9	W360178-01
80-6	W360178-01
150-3	W360178-01
300-1.5	W360179-01
600-.75	W360180-01

SEE SEPARATE PARTS LIST 1063829-1 THRU -8

NEXT ASSY.	USED ON
APPLICATION	

THE INFORMATION DISCLOSED HEREIN WAS ORIGINATED BY AND IS THE PROPERTY OF ELGAR CORPORATION, AND EXCEPT FOR RIGHTS EXPRESSLY GRANTED TO THE UNITED STATES GOVERNMENT, ELGAR CORPORATION RESERVES ALL PATENT, PROPRIETARY, DESIGN, USE, SALE, MANUFACTURING AND REPRODUCTION RIGHTS THEREIN.

UNLESS OTHERWISE SPECIFIED DIMENSIONS ARE IN INCHES
TOLERANCES ON
DECIMALS .XX ± .03 .XXX ± .010 FRACTIONS ± 1/32 ANGLES ± 1/2°
DO NOT SCALE THIS DRAWING

MATERIAL:

FINISH:

CONTRACT NO.
FIRST MADE FOR:

APPROVAL		DATE
DRAWN	A. RUDIN	9/25/98
CHECKED		
ENGINEER		
QA-REL		

SEE DOCUMENT CONTROL FOR ORIGINAL SIGNATURES

ELGAR

DWG ASSY
FINAL, DCRB2 3.5"

SIZE	CODE IDENT. NO.	DWG. NO.	REV
D	25965	1063829	U

SCALE: 1/2 SHEET 1 OF 2

1063829

NOTES: UNLESS OTHERWISE SPECIFIED.

1. ALL CAPACITORS IN MFD'S UNLESS OTHERWISE SPECIFIED.
2. ALL RESISTORS IN OHMS AND 1/4W ±1% UNLESS OTHERWISE SPECIFIED.
3. * THESE COMPONENTS ARE ADDED BY SORENSEN, DEPENDING ON MODEL.
4. NUMBERS IN PARENTHESES ARE FOR THE LM317H, NUMBERS NOT IN PARENTHESES ARE FOR THE LM317T.
5. NEXT AVAILABLE DESIGNATORS ARE: R80,C28,D40,Q10,U9,T3,SW2,TB4,F2
6. DESIGNATORS NOT USED ARE: TB1,TB2.

REVISIONS

ZONE	REV	DESCRIPTION		DATE	APPROVED
	-	ORIGINATED		891022	
	A	REVISED PER ECO89A377		891116	
	B	REVISED PER ECO90A152		900308	
	C	REVISED PER ECO90A216		900406	
	D	REVISED PER ECO90A702		900830	
	E	REVISED PER ECO92A148		920420	
	F	REVISED PER ECO92A297	JM	920629	
	G	REVISED PER ECN N950370	MS	950510	
	H	REVISED PER ECN N950374	DR	950602	ML
	J	REVISED PER ECN N950802	BC	951020	ML
	K	REVISED PER ECN N950458	DO	950823	ML

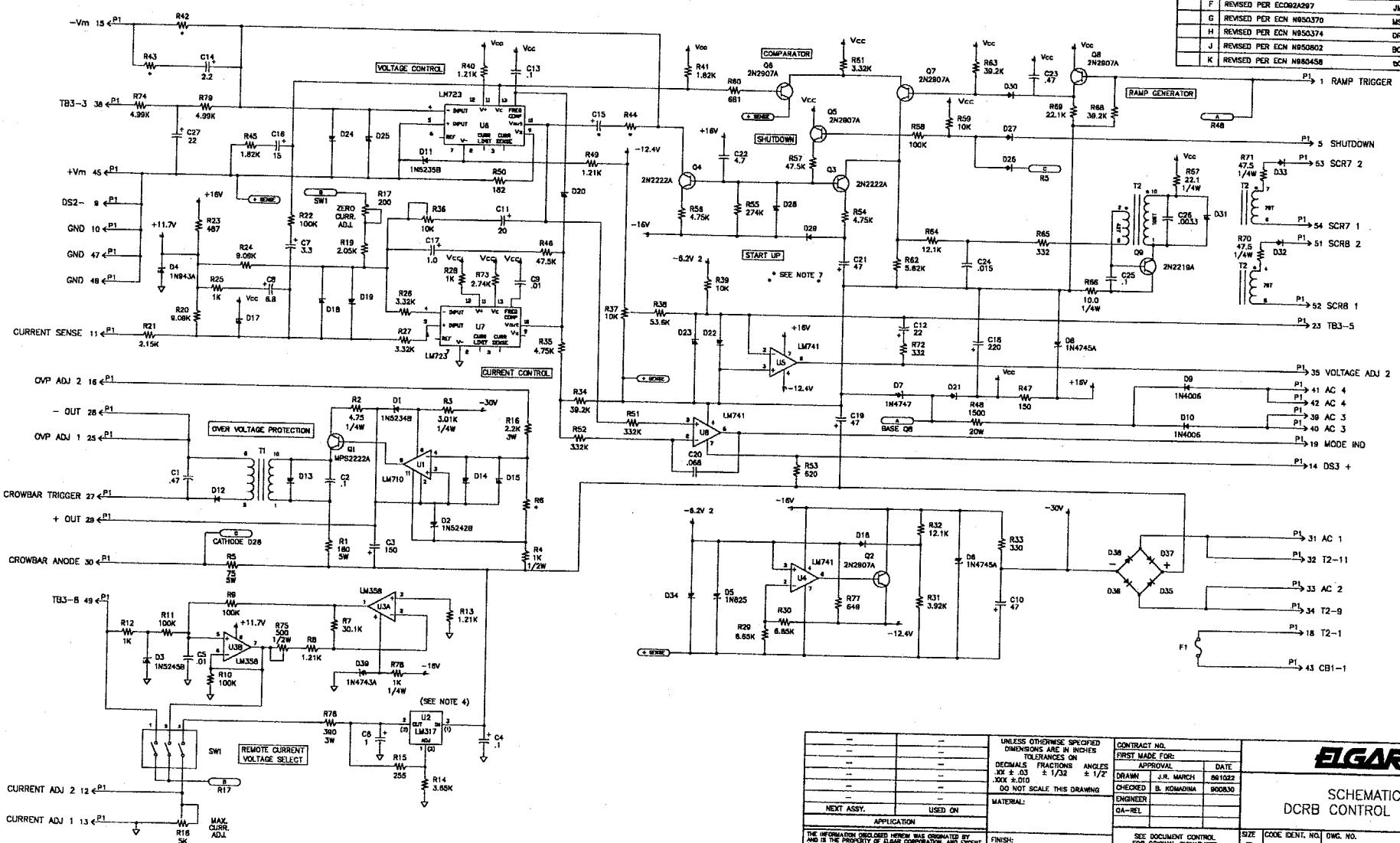

NEXT ASSY.	USED ON	
APPLICATION		

THE INFORMATION DISCLOSED HEREIN WAS ORIGINATED BY AND IS THE PROPERTY OF ELGAR CORPORATION, AND EXCEPT FOR RIGHTS EXPRESSLY GRANTED TO THE UNITED STATES GOVERNMENT, ELGAR CORPORATION RESERVES ALL PATENT, PROPRIETARY, DESIGN, USE, SALE, MANUFACTURING AND REPRODUCTION RIGHTS THERETO.

UNLESS OTHERWISE SPECIFIED DIMENSIONS ARE IN INCHES
TOLERANCES ON
DECIMALS .XX ± .03 .XXX ±.010 FRACTIONS ± 1/32 ANGLES ± 1/2°
DO NOT SCALE THIS DRAWING

MATERIAL:

FINISH:

CONTRACT NO.
FIRST MADE FOR:

APPROVAL		DATE
DRAWN	J.R. MARCH	891022
CHECKED	B. KOMADINA	900830
ENGINEER		
QA-REL		

SEE DOCUMENT CONTROL FOR ORIGINAL SIGNATURES

ELGAR

SCHEMATIC
DCRB CONTROL BOARD

SIZE	CODE IDENT. NO.	DWG. NO.	REV
D	25965	1063006	K

SCALE NONE SHEET 1 OF 1

1063006

REVISIONS				
ZONE	REV	DESCRIPTION	DATE	APPROVED
		SEE SHEET 1		

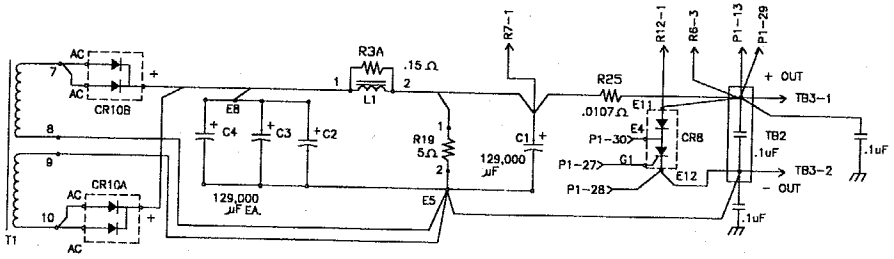

DCR10-40B2

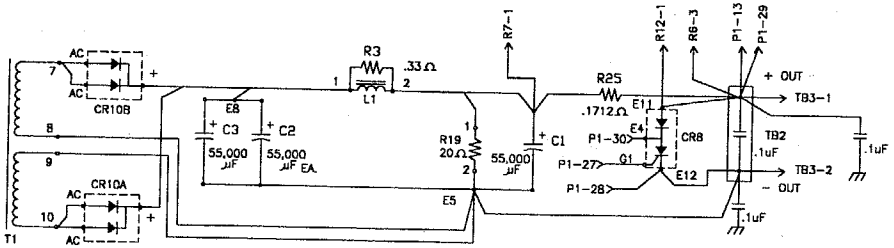

DCR20-25B2

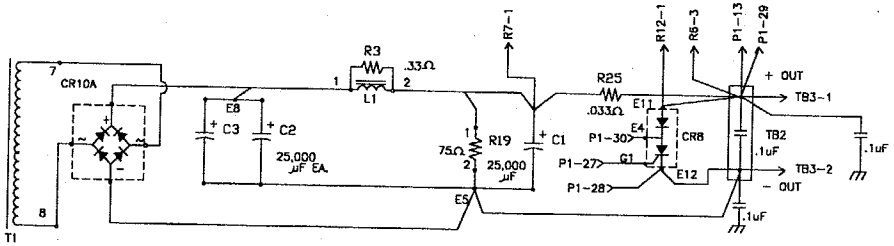

DCR40-13B2

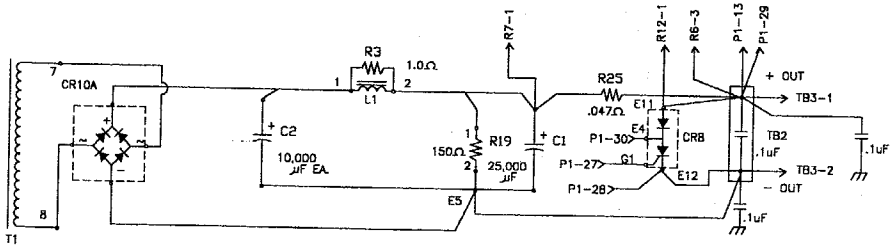

DCR60-9B2

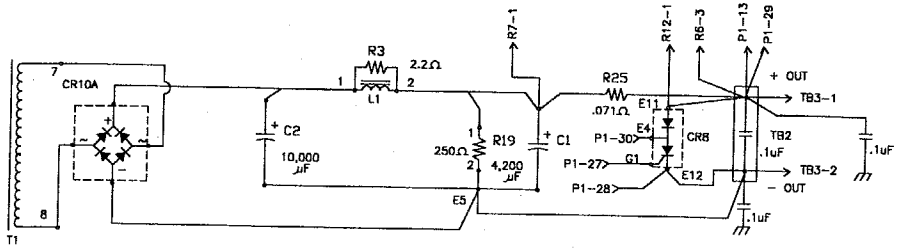

DCR80-6B2

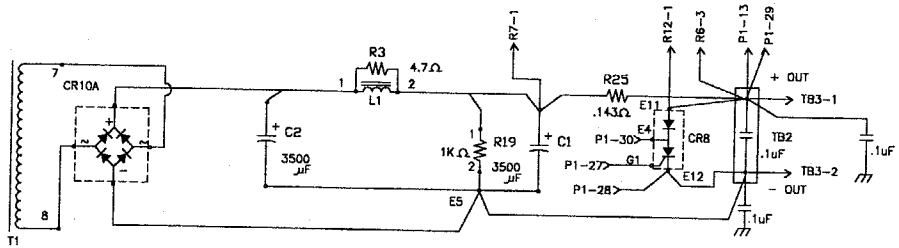

DCR150-3B2

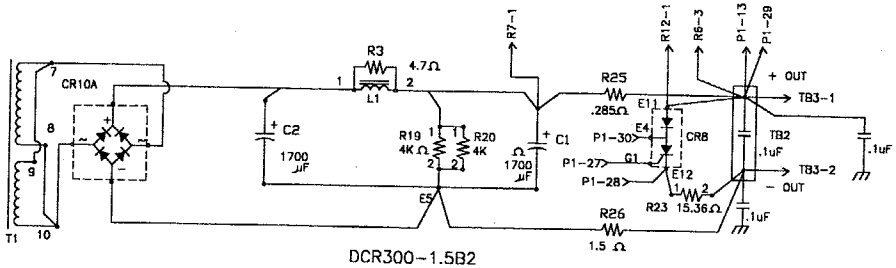

DCR300-1.5B2

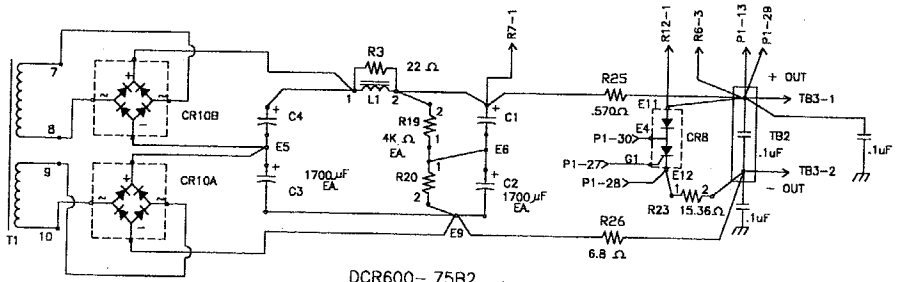

DCR600-.75B2

SIZE	CODE IDENT. NO.	DWG. NO.	REV
D	25965	1064093	M
SCALE 1/1		SHEET 2 OF 2	

1064093

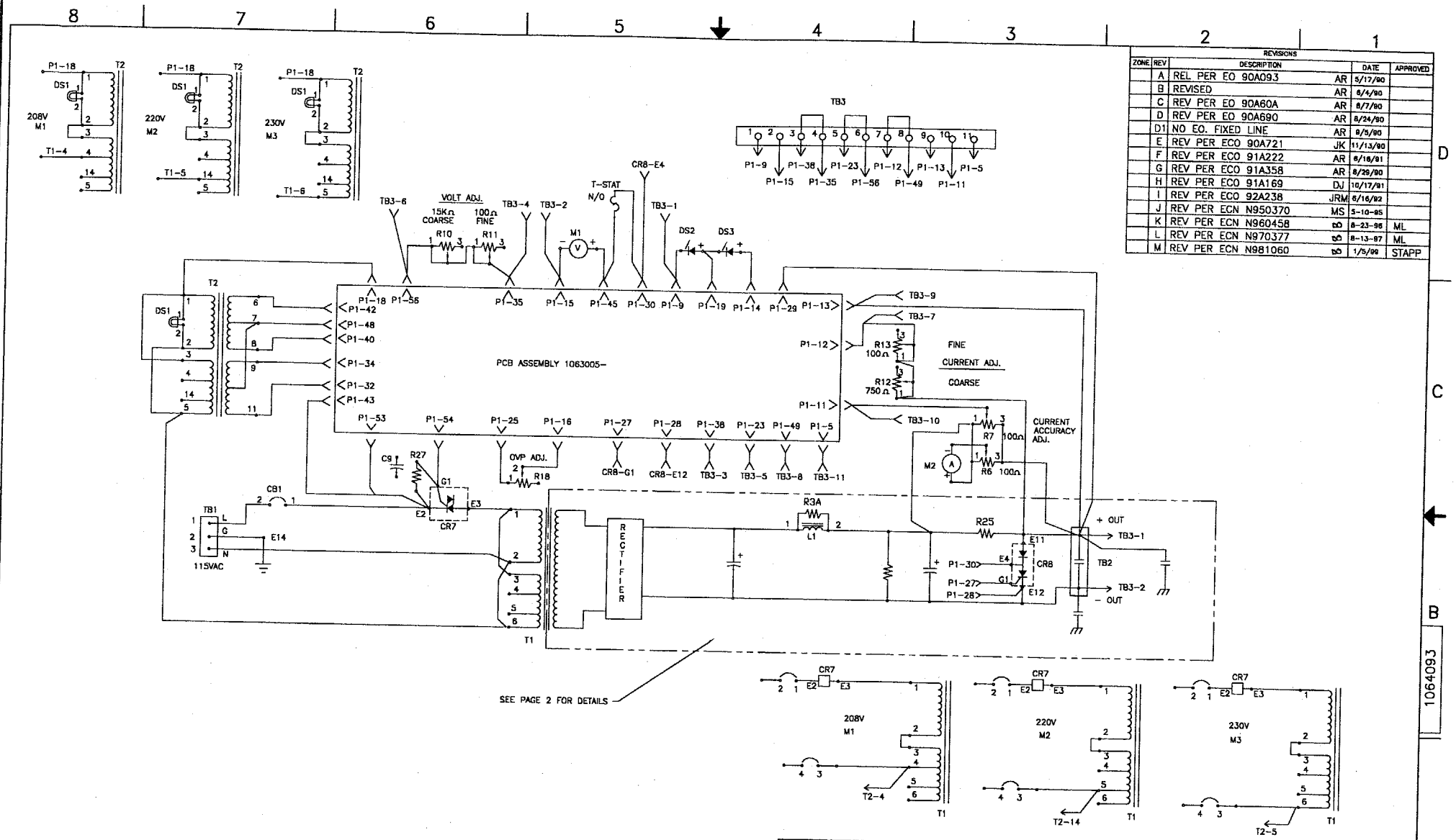

ZONE	REV	DESCRIPTION		DATE	APPROVED
	A	REL PER EO 90A093	AR	5/17/90	
	B	REVISED	AR	6/4/90	
	C	REV PER EO 90A60A	AR	6/7/90	
	D	REV PER EO 90A690	AR	6/24/90	
	D1	NO EO. FIXED LINE	AR	9/5/90	
	E	REV PER ECO 90A721	JK	11/13/90	
	F	REV PER ECO 91A222	AR	6/18/91	
	G	REV PER ECO 91A358	AR	8/29/90	
	H	REV PER ECO 91A169	DJ	10/17/91	
	I	REV PER ECO 92A238	JRM	6/16/92	
	J	REV PER ECN N950370	MS	5-10-95	
	K	REV PER ECN N960458	BO	8-23-96	ML
	L	REV PER ECN N970377	BO	8-13-97	ML
	M	REV PER ECN N981060	BO	1/5/99	STAPP

REVISIONS

NEXT ASSY.	USED ON
–	–
–	–
–	–
–	–
–	–
–	–
–	–

APPLICATION

THE INFORMATION DISCLOSED HEREON WAS ORIGINATED BY AND IS THE PROPERTY OF ELGAR CORPORATION, AND EXCEPT FOR RIGHTS EXPRESSLY GRANTED TO THE UNITED STATES GOVERNMENT, ELGAR CORPORATION RESERVES ALL PATENT, PROPRIETARY, DESIGN, USE, SALE, MANUFACTURING AND REPRODUCTION RIGHTS THEREIN.

UNLESS OTHERWISE SPECIFIED DIMENSIONS ARE IN INCHES
TOLERANCES ON
DECIMALS .XX ± .03 .XXX ± .010
FRACTIONS ± 1/32
ANGLES ± 1/2°
DO NOT SCALE THIS DRAWING

MATERIAL:

FINISH:

CONTRACT NO.
FIRST MADE FOR:

APPROVAL		DATE
DRAWN	A. RUDIN	11/30/88
CHECKED		
ENGINEER		
QA-REL		

SEE DOCUMENT CONTROL FOR ORIGINAL SIGNATURES

ELGAR

SCHMATIC, WIRING
DCRB 500W

SIZE	CODE IDENT. NO.	DWG. NO.	REV
D	25965	1064093	M

SCALE 1/1 SHEET 1 OF 2

1064093

NOTES: UNLESS OTHERWISE SPECIFIED.

1. ALL DIMENSIONS ARE IN INCHES (mm).
2. SLIDE-RAIL OPTION AVAILABLE.

REVISIONS				
ZONE	REV	DESCRIPTION	DATE	APPROVED
	A	REDRAW FOR CLARITY MS	4/4/95	
	B	REV PER ECN N950370 MS	5/10/95	

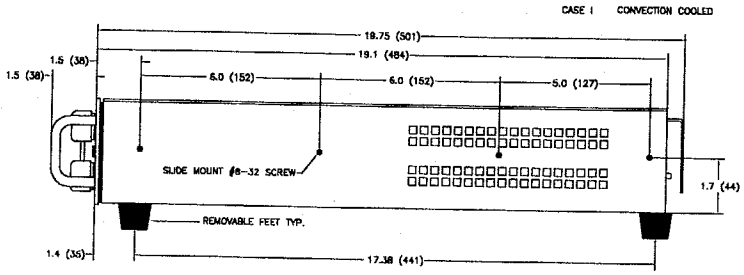

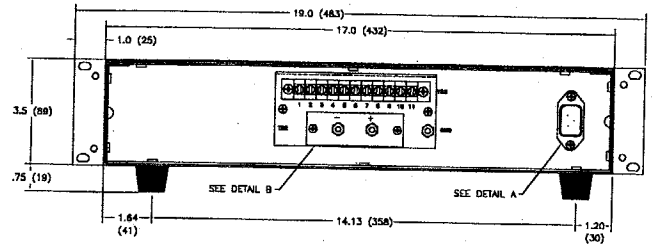

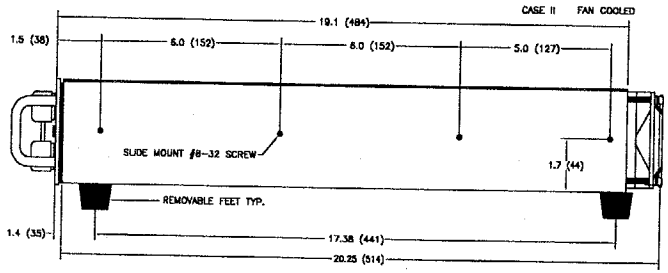

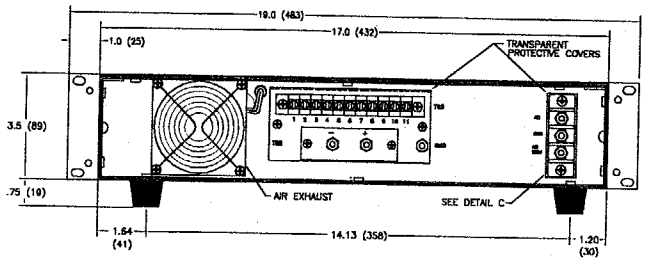

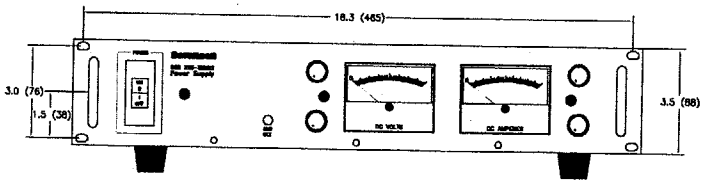

CASE I AND II - FRONT VIEW

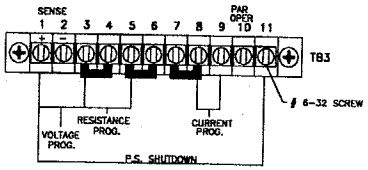

REFER TO MANUAL FOR COMPLETE DETAILS

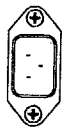

AC INPUT (CONVECTION COOLED)

DETAIL A
SCALE 1/1

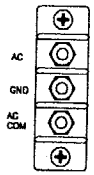

AC INPUT (FAN COOLED)

DETAIL C
SCALE 1/1

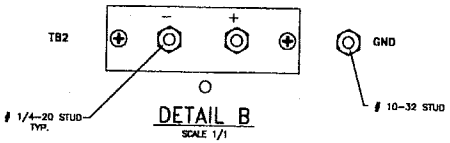

DETAIL B
SCALE 1/1

-	-
-	-
-	-
-	-
-	-
-	-
-	DCRB2
NEXT ASSY.	USED ON
APPLICATION	

THE INFORMATION DISCLOSED HEREIN WAS ORIGINATED BY AND IS THE PROPERTY OF ELGAR CORPORATION, AND EXCEPT FOR RIGHTS EXPRESSLY GRANTED TO THE UNITED STATES GOVERNMENT, ELGAR CORPORATION RESERVES ALL PATENT, PROPRIETARY, DESIGN, USE, SALE, MANUFACTURING AND REPRODUCTION RIGHTS THERETO.

UNLESS OTHERWISE SPECIFIED DIMENSIONS ARE IN INCHES
TOLERANCES ON

DECIMALS	FRACTIONS	ANGLES
.XX ± .03	± 1/32	± 1/2°
.XXX ±.010		

DO NOT SCALE THIS DRAWING

MATERIAL:

FINISH:

CONTRACT NO.
FIRST MADE FOR:

APPROVAL		DATE
DRAWN	A. RUDIN	10/13/89
CHECKED		
ENGINEER		
QA-REL		

SEE DOCUMENT CONTROL FOR ORIGINAL SIGNATURES

ELGAR

DWG OUTLINE
DCRB2 3.5"

SIZE	CODE IDENT. NO.	DWG. NO.	REV
D	25965	1063996	B

SCALE 1/2 SHEET 1 OF 1

REVISIONS				
ZONE	REV	DESCRIPTION	DATE	APPROVED
		SEE SHEET 1		

PCB CONTROL ASSY	500W								1000W						
DRAWING NUMBER	DCR10-40B2	DCR20-25B2	DCR40-13B2	DCR60-9B2	DCR80-6B2	DCR150-3B2	DCR300-1.5B2	DCR600-.75B2	DCR10-40B2	DCR20-25B2	DCR60-18B2	DCR40-13B2	DCR60-9B2	DCR80-6B2	DCR150-3B2
Q4	1063005														
Q5	1064104-2														
Q6	11Q0001-000														
Q7	11Q0001-000														
Q8	11Q0001-000														
Q9	11Q0001-000														
R1	386-7248P32														
R2	586054-40														
R3	1063040-221														
R4	1063040-97														
R5	1063041-74														
R6	586054-120	586055-125		586055-114	586055-122	586055-110	586055-114	586055-114	586054-125		586055-114	586055-122	586055-110	586055-114	
R7	586054-80														
R8	586055-145														
R9	586055-78														
R10	586055-170														
R11	586055-170														
R12	586055-170														
R13	586055-74														
R14	586055-78														
R15	586055-101														
R16	586055-260														
R17	167401-6														
R18	1058959-5														
R19	1058959-9														
R20	586055-89														
R21	586055-120														
R22	586055-90														
R23	586055-170														
R24	586055-59														
R25	586055-120														
R26	586055-74														
R27	586055-99														
R28	586055-99														
R29	586055-74														
R30	586055-188														
R31	586055-188														
R32	586055-202														
R33	586055-126														
R34	167401-101														
R35	586055-203														
R36	586055-207														
R37	1058959-10														
R38	1058959-10														
R39	586055-157														
R40	812-100-2F														
R41	586055-78														
R42	586055-122	586055-194	586055-151	586055-159	586055-165	586055-236	586055-215	1063041-250	586055-194	586055-151	586055-159	586055-165	586055-236	586055-215	1063041-250
R44	586055-66		586055-205	586055-108	586055-66	586055-205		586055-97	586055-66	586055-112	586055-60	586055-205	586055-205	586055-202	586055-205
R45	586055-205														
R46	586055-205														
R47	586055-209														
R48	586055-210														
R49	818-152-20														
R50	586055-78														
R51	586055-206														
R52	586055-211														
R53	586055-211														
R54	167401-108														
R55	586055-207														
R56	586055-192														
	586055-207														

SIZE	CODE IDENT. NO.	DWG. NO.	REV
D	25965	M360646	F
SCALE 1/1		SHEET 4 OF 4	

REVISIONS				
ZONE	REV	DESCRIPTION	DATE	APPROVED
		SEE SHEET 1		

PCB CONTROL ASSY	500W								1000W						
DRAWING NUMBER	DCR10-40B2	DCR20-25B2	DCR40-13B2	DCR60-9B2	DCR80-6B2	DCR150-3B2	DCR300-1.5B2	DCR600-.75B2	DCR10-40B2	DCR20-25B2	DCR60-18B2	DCR40-13B2	DCR60-9B2	DCR80-6B2	DCR150-3B2
R57	1063005														
R58	586055-209														
R59	586055-170														
R60	586055-122														
R61	586055-66														
R62	586055-99														
R63	586055-110														
R64	586055-203														
R65	586055-126														
R66	586055-51														
R67	1063040-228														
R68	1063040-229														
R69	586055-203														
R70	586055-204														
R71	1063040-243														
R72	1063040-243														
R73	586055-51														
R74	586055-95														
R75	586055-187														
R76	1058959-6														
R77	167401-103														
R78	586055-65														
R79	1063040-74														
SW1	586055-187														
T1	1060392-3														
T2	589333-1														
U1	586897-1														
U2	386-7277P4														
U3	984405-1														
U4	1058985-1														
U5	586372-3														
U6	586372-3														
U7	586062-1														
U8	586082-1														
	586372-3														

SIZE	CODE IDENT. NO.	DWG. NO.	REV
D	25965	M360646	F
SCALE 1/1		SHEET 3 OF 4	

REVISIONS				
ZONE	REV	DESCRIPTION	DATE	APPROVED
		SEE SHEET 1		

PCB CONTROL ASSY	500W								1000W						
DRAWING NUMBER	DCR10-40B2	DCR20-25B2	DCR40-13B2	DCR60-9B2	DCR80-6B2	DCR150-3B2	DCR300-1.5B2	DCR600-.75B2	DCR20-50B2	DCR40-25B2	DCR60-18B2	DCR80-12B2	DCR150-6B2	DCR300-3B2	DCR600-1.5B2
C8	1063005														
C9	235-7395P64														
C10	24-2015-1														
C11	1064980-1														
C12	235-7404P33														
C13	235-7395P67														
C14	24-2037-7														
C15	235-7395P61														
C16	235-7395P55		586385-5	235-7395P55		586385-5			235-7395P55	536385-5	235-7395P55	536385-5			
C17	586385-5														
C18	1033981-47														
C19	1064980-2														
C20	1064980-1														
C21	24-2015-11														
C22	235-7395P56														
C23	1063985-9														
C24	24-2037-15														
C25	24-2015-3														
C26	587626-65														
C27	24-2409-4														
D1	235-7395P67														
D2	588101-9														
D3	588101-15														
D4	588101-17														
D5	588105-7														
D6	588105-3														
D7	588102-12														
D8	588102-13														
D9	588102-12														
D10	322-7236P6														
D11	322-7236P6														
D12	588101-10														
D13	322-7236P6														
D14	322-7236P6														
D15	322-7236P6														
D16	322-7236P6														
D17	322-7236P6														
D18	322-7236P6														
D19	322-7236P6														
D20	322-7236P6														
D21	322-7236P6														
D22	322-7236P6														
D23	322-7236P6														
D24	322-7236P6														
D25	322-7236P6														
D26	322-7236P6														
D27	322-7236P6														
D28	322-7236P6														
D29	322-7236P6														
D30	322-7236P6														
D31	322-7236P6														
D32	322-7236P6														
D33	322-7236P6														
D34	322-7236P6														
D35	322-7236P6														
D36	322-7236P6														
D37	322-7236P6														
D38	322-7236P6														
D39	322-7236P6														
F1	588102-10														
Q1	1063539-3														
Q2	1064104-2														
Q3	11Q0001-000														
	1064104-2														

SIZE	CODE IDENT. NO.	DWG. NO.	REV
D	25965	M360646	F
SCALE 1/1		SHEET 2 OF 4	

NOTES: UNLESS OTHERWISE SPECIFIED.

REVISIONS				
ZONE	REV	DESCRIPTION	DATE	APPROVED
	B	REVISED PER ECN N970566A	11/6/97	ML
	C	REVISED PER ECN N980442 T.H.	6/1/98	STAPP
	D	REVISED PER ECN N981060 DO	1/5/99	STAPP
	E	REVISED PER ECN N990014 DO	2/2/99	STAPP
	F	REVISED PER ECN N000297	3/29/00	G. Stapp

	500W								1000W						
FINAL ASSY	DCR10-40B2	DCR20-25B2	DCR40-13B2	DCR60-9B2	DCR80-6B2	DCR150-3B2	DCR300-1.5B2	DCR600-.75B2	DCR20-50B2	DCR40-25B2	DCR60-18B2	DCR80-12B2	DCR150-6B2	DCR300-3B2	DCR600-1.5B2
DRAWING NUMBER															
CR7	1063829								1064436						
CR8	846-600-30														
CR10A	1063611-2								–						
CR10B	1063993-1		847-100-AB	1063088-4	1063089-4		1063089-6		1063195-1	1063087-2	1063088-4		1063089-4		1063089-5
L1	1063993-1			–				1063089-6	1063195-1	–					
T1	5360377-01	5360370-01	5360371-01	5360372-01	5360373-01	5360374-01	5360375-01	5360376-01	5360382-01	5360383-01	5360384-01	5360385-01	5360386-01	5360387-01	5360388-01
T2	5360414-01	5360415-01	5360416-01	5360417-01	5360418-01	5360419-01	5360420-01	5360421-01	5360393-01	5360394-01	5360395-01	5360396-01	5360397-01	5360398-01	
T-STAT	5360366-01														
	861-671-00														

FRONT PANEL ASSY	DCR10-40B2	DCR20-25B2	DCR40-13B2	DCR60-9B2	DCR80-6B2	DCR150-3B2	DCR300-1.5B2	DCR600-.75B2	DCR20-50B2	DCR40-25B2	DCR60-18B2	DCR80-12B2	DCR150-6B2	DCR300-3B2	DCR600-1.5B2
DRAWING NUMBER															
CB1	1063513														
DS1	1064643-24								1064643-27						
DS2	43-357														
DS3	1058485-1														
M1	1058485-1														
M2	94-579-1	94-579-2	94-579-3	94-579-4	94-579-5	94-579-6	94-579-7	94-579-8	94-579-2	94-579-3	94-579-4	94-579-5	94-579-6	94-579-7	94-579-8
R10	1063179-11	1063179-5	1063179-6	1063179-7	1063179-9	1063179-10	1063179-12	1063179-13	1063179-11	1063179-14	1063179-6	1063179-7	1063179-9	1063179-10	1063179-15
R11	1065765-4														
R12	1065765-3														
R13	1065765-5														
	1065765-3														

REAR PANEL ASSY	DCR10-40B2	DCR20-25B2	DCR40-13B2	DCR60-9B2	DCR80-6B2	DCR150-3B2	DCR300-1.5B2	DCR600-.75B2	DCR20-50B2	DCR40-25B2	DCR60-18B2	DCR80-12B2	DCR150-6B2	DCR300-3B2	DCR600-1.5B2
DRAWING NUMBER	1064468								1063514						
R19	1063672-1	1063672-2	1063672-3	1063672-4	1063672-5	1063672-6	1063672-7		1063672-2	1063672-3	1063672-4	1063672-5	1063672-6	1063672-7	
R20	–						1063672-7		1063672-2	1063672-3	1063672-4	1063672-5	1063672-6	1063672-7	
R26	–						1063672-14	1063672-15	–						

RESISTOR ASSY	DCR10-40B2	DCR20-25B2	DCR40-13B2	DCR60-9B2	DCR80-6B2	DCR150-3B2	DCR300-1.5B2	DCR600-.75B2	DCR20-50B2	DCR40-25B2	DCR60-18B2	DCR80-12B2	DCR150-6B2	DCR300-3B2	DCR600-1.5B2
DRAWING NUMBER															
R3	1063827														
	27-590-5	27-590-13		27-590-25	27-590-33	27-590-41		588056-29	27-590-13	27-590-13	27-590-17	27-590-23	27-590-41		

CAP ASSY	DCR10-40B2	DCR20-25B2	DCR40-13B2	DCR60-9B2	DCR80-6B2	DCR150-3B2	DCR300-1.5B2	DCR600-.75B2	DCR20-50B2	DCR40-25B2	DCR60-18B2	DCR80-12B2	DCR150-6B2	DCR300-3B2	DCR600-1.5B2
DRAWING NUMBER															
C1	1063865														
D2	1063254-1	1063869-2	1063869-4		1063869-5	1063254-6	1063254-7		1063869-2	1063869-4		1063869-5	1063254-6	1063254-7	
D3	1063254-1	1063869-2	1063869-4	1063869-5		1063254-6	1063254-7		1063869-2	1063869-4		1063869-5	1063254-6	1063254-7	
D4	1063254-1	–			–			1063254-7	1063869-2	1063869-4		1063869-5	–		1063254-7
								1063254-7	1063869-2	1063869-4	–	1063869-5	–		1063254-7

POT ASSY	DCR10-40B2	DCR20-25B2	DCR40-13B2	DCR60-9B2	DCR80-6B2	DCR150-3B2	DCR300-1.5B2	DCR600-.75B2	DCR20-50B2	DCR40-25B2	DCR60-18B2	DCR80-12B2	DCR150-6B2	DCR300-3B2	DCR600-1.5B2
DRAWING NUMBER															
R6	1063865								1063518						
R7	589343-37														
R18	589343-37														
	1060275-17	589343-54	1060275-21	1060275-23		1060275-26		1060275-29	589343-54	1060275-21	1060275-23		1060275-26		1060275-29

PCB CONTROL ASSY	DCR10-40B2	DCR20-25B2	DCR40-13B2	DCR60-9B2	DCR80-6B2	DCR150-3B2	DCR300-1.5B2	DCR600-.75B2	DCR20-50B2	DCR40-25B2	DCR60-18B2	DCR80-12B2	DCR150-6B2	DCR300-3B2	DCR600-1.5B2
DRAWING NUMBER															
C1	1063005														
C2	24-2037-15														
C3	1063059-1														
C4	1063046-55														
C5	980707-3														
C6	587626-89														
C7	235-7395P76														
	586058-13														

–	–
–	–
–	–
–	–
–	–
–	M360645
NEXT ASSY.	USED ON
APPLICATION	

THE INFORMATION DISCLOSED HEREIN WAS ORIGINATED BY AND IS THE PROPERTY OF ELGAR CORPORATION, AND EXCEPT FOR RIGHTS EXPRESSLY GRANTED TO THE UNITED STATES GOVERNMENT, ELGAR CORPORATION RESERVES ALL PATENT, PROPRIETARY, DESIGN, USE, SALE, MANUFACTURING AND REPRODUCTION RIGHTS THERETO.

UNLESS OTHERWISE SPECIFIED DIMENSIONS ARE IN INCHES
TOLERANCES ON
DECIMALS .XX ± .03 .XXX ± .010 FRACTIONS ± 1/32 ANGLES ± 1/2°
DO NOT SCALE THIS DRAWING

MATERIAL:

FINISH:

CONTRACT NO.
FIRST MADE FOR:

APPROVAL		DATE
DRAWN	S.BORECK	7-10-98
CHECKED	M.LEJEUNE	7-10-98
ENGINEER	T.CUPPS	7-20-98
QA-REL	G.H.	7-20-98

ELGAR

REPLACEMENT PARTS 500/1000W

SIZE	CODE IDENT. NO.	DWG. NO.	REV
D	25965	M360646	F

SCALE 1/1 SHEET 1 OF 4