Virtex™-E 1.8 V Field Programmable Gate Arrays

DS022-1 (v2.2) November 9, 2001

Preliminary Product Specification

Features

- Fast, High-Density 1.8 V FPGA Family
  - Densities from 58 k to 4 M system gates
  - 130 MHz internal performance (four LUT levels)
  - Designed for low-power operation
  - PCI compliant 3.3 V, 32/64-bit, 33/ 66-MHz
- Highly Flexible SelectI/O+™ Technology
  - Supports 20 high-performance interface standards
  - Up to 804 singled-ended I/Os or 344 differential I/O pairs for an aggregate bandwidth of > 100 Gb/s
- Differential Signalling Support
  - LVDS (622 Mb/s), BLVDS (Bus LVDS), LVPECL
  - Differential I/O signals can be input, output, or I/O
  - Compatible with standard differential devices
  - LVPECL and LVDS clock inputs for 300+ MHz clocks
- Proprietary High-Performance SelectLink™ Technology
  - Double Data Rate (DDR) to Virtex-E link
  - Web-based HDL generation methodology
- Sophisticated SelectRAM+™ Memory Hierarchy
  - 1 Mb of internal configurable distributed RAM
  - Up to 832 Kb of synchronous internal block RAM
  - True Dual-Port™ BlockRAM capability
  - Memory bandwidth up to 1.66 Tb/s (equivalent bandwidth of over 100 RAMBUS channels)
  - Designed for high-performance Interfaces to External Memories
  - 200 MHz ZBT* SRAMs
  - 200 Mb/s DDR SDRAMs
  - Supported by free Synthesizable reference design

* ZBT is a trademark of Integrated Device Technology, Inc.

- High-Performance Built-In Clock Management Circuitry
  - Eight fully digital Delay-Locked Loops (DLLs)
  - Digitally-Synthesized 50% duty cycle for Double Data Rate (DDR) Applications
  - Clock Multiply and Divide
  - Zero-delay conversion of high-speed LVPECL/LVDS clocks to any I/O standard
- Flexible Architecture Balances Speed and Density
  - Dedicated carry logic for high-speed arithmetic
  - Dedicated multiplier support
  - Cascade chain for wide-input function
  - Abundant registers/latches with clock enable, and dual synchronous/asynchronous set and reset
  - Internal 3-state bussing
  - IEEE 1149.1 boundary-scan logic
  - Die-temperature sensor diode
- Supported by Xilinx Foundation™ and Alliance Series™ Development Systems
  - Further compile time reduction of 50%
  - Internet Team Design (ITD) tool ideal for million-plus gate density designs
  - Wide selection of PC and workstation platforms
- SRAM-Based In-System Configuration
  - Unlimited re-programmability
- Advanced Packaging Options
  - 0.8 mm Chip-scale
  - 1.0 mm BGA
  - 1.27 mm BGA
  - HQ/PQ
- 0.18 µm 6-Layer Metal Process
- 100% Factory Tested

© 2001 Xilinx, Inc. All rights reserved. All Xilinx trademarks, registered trademarks, patents, and disclaimers are as listed at http://www.xilinx.com/legal.htm.
All other trademarks and registered trademarks are the property of their respective owners. All specifications are subject to change without notice.

Table 1: **Virtex-E Field-Programmable Gate Array Family Members**

Device	System Gates	Logic Gates	CLB Array	Logic Cells	Differential I/O Pairs	User I/O	BlockRAM Bits	Distributed RAM Bits
XCV50E	71,693	20,736	16 x 24	1,728	83	176	65,536	24,576
XCV100E	128,236	32,400	20 x 30	2,700	83	196	81,920	38,400
XCV200E	306,393	63,504	28 x 42	5,292	119	284	114,688	75,264
XCV300E	411,955	82,944	32 x 48	6,912	137	316	131,072	98,304
XCV400E	569,952	129,600	40 x 60	10,800	183	404	163,840	153,600
XCV600E	985,882	186,624	48 x 72	15,552	247	512	294,912	221,184
XCV1000E	1,569,178	331,776	64 x 96	27,648	281	660	393,216	393,216
XCV1600E	2,188,742	419,904	72 x 108	34,992	344	724	589,824	497,664
XCV2000E	2,541,952	518,400	80 x 120	43,200	344	804	655,360	614,400
XCV2600E	3,263,755	685,584	92 x 138	57,132	344	804	753,664	812,544
XCV3200E	4,074,387	876,096	104 x 156	73,008	344	804	851,968	1,038,336

Virtex-E Compared to Virtex Devices

The Virtex-E family offers up to 43,200 logic cells in devices up to 30% faster than the Virtex family.

I/O performance is increased to 622 Mb/s using Source Synchronous data transmission architectures and synchronous system performance up to 240 MHz using singled-ended SelectI/O technology. Additional I/O standards are supported, notably LVPECL, LVDS, and BLVDS, which use two pins per signal. Almost all signal pins can be used for these new standards.

Virtex-E devices have up to 640 Kb of faster (250 MHz) block SelectRAM, but the individual RAMs are the same size and structure as in the Virtex family. They also have eight DLLs instead of the four in Virtex devices. Each individual DLL is slightly improved with easier clock mirroring and 4x frequency multiplication.

V_{CCINT}, the supply voltage for the internal logic and memory, is 1.8 V, instead of 2.5 V for Virtex devices. Advanced processing and 0.18 µm design rules have resulted in smaller dice, faster speed, and lower power consumption.

I/O pins are 3 V tolerant, and can be 5 V tolerant with an external 100 Ω resistor. PCI 5 V is not supported. With the addition of appropriate external resistors, any pin can tolerate any voltage desired.

Banking rules are different. With Virtex devices, all input buffers are powered by V_{CCINT}. With Virtex-E devices, the LVTTL, LVCMOS2, and PCI input buffers are powered by the I/O supply voltage V_{CCO}.

The Virtex-E family is not bitstream-compatible with the Virtex family, but Virtex designs can be compiled into equivalent Virtex-E devices.

The same device in the same package for the Virtex-E and Virtex families are pin-compatible with some minor exceptions. See the data sheet pinout section for details.

General Description

The Virtex-E FPGA family delivers high-performance, high-capacity programmable logic solutions. Dramatic increases in silicon efficiency result from optimizing the new architecture for place-and-route efficiency and exploiting an aggressive 6-layer metal 0.18 µm CMOS process. These advances make Virtex-E FPGAs powerful and flexible alternatives to mask-programmed gate arrays. The Virtex-E family includes the nine members in Table 1.

Building on experience gained from Virtex FPGAs, the Virtex-E family is an evolutionary step forward in programmable logic design. Combining a wide variety of programmable system features, a rich hierarchy of fast, flexible interconnect resources, and advanced process technology, the Virtex-E family delivers a high-speed and high-capacity programmable logic solution that enhances design flexibility while reducing time-to-market.

Virtex-E Architecture

Virtex-E devices feature a flexible, regular architecture that comprises an array of configurable logic blocks (CLBs) surrounded by programmable input/output blocks (IOBs), all interconnected by a rich hierarchy of fast, versatile routing

resources. The abundance of routing resources permits the Virtex-E family to accommodate even the largest and most complex designs.

Virtex-E FPGAs are SRAM-based, and are customized by loading configuration data into internal memory cells. Configuration data can be read from an external SPROM (master serial mode), or can be written into the FPGA (SelectMAP™, slave serial, and JTAG modes).

The standard Xilinx Foundation Series™ and Alliance Series™ Development systems deliver complete design support for Virtex-E, covering every aspect from behavioral and schematic entry, through simulation, automatic design translation and implementation, to the creation and downloading of a configuration bit stream.

Higher Performance

Virtex-E devices provide better performance than previous generations of FPGAs. Designs can achieve synchronous system clock rates up to 240 MHz including I/O or 622 Mb/s using Source Synchronous data transmission architectures. Virtex-E I/Os comply fully with 3.3 V PCI specifications, and interfaces can be implemented that operate at 33 MHz or 66 MHz.

While performance is design-dependent, many designs operate internally at speeds in excess of 133 MHz and can achieve over 311 MHz. Table 2 shows performance data for representative circuits, using worst-case timing parameters.

Table 2: **Performance for Common Circuit Functions**

Function	Bits	Virtex-E (-7)
Register-to-Register		
Adder	16 64	4.3 ns 6.3 ns
Pipelined Multiplier	8 x 8 16 x 16	4.4 ns 5.1 ns
Address Decoder	16 64	3.8 ns 5.5 ns
16:1 Multiplexer		4.6 ns
Parity Tree	9 18 36	3.5 ns 4.3 ns 5.9 ns
Chip-to-Chip		
HSTL Class IV		
LVTTL,16mA, fast slew		
LVDS		
LVPECL		

Virtex-E Device/Package Combinations and Maximum I/O

Table 3: **Virtex-E Family Maximum User I/O by Device/Package (Excluding Dedicated Clock Pins)**

	XCV 50E	XCV 100E	XCV 200E	XCV 300E	XCV 400E	XCV 600E	XCV 1000E	XCV 1600E	XCV 2000E	XCV 2600E	XCV 3200E
CS144	94	94	94								
PQ240	158	158	158	158	158						
HQ240						158	158				
BG352		196	260	260							
BG432				316	316	316					
BG560					404	404	404	404	404		
FG256	176	176	176	176							
FG456			284	312							
FG676					404	444					
FG680						512	512	512	512		
FG860							660	660	660		
FG900						512	660	700			
FG1156							660	724	804	804	804

Virtex-E Ordering Information

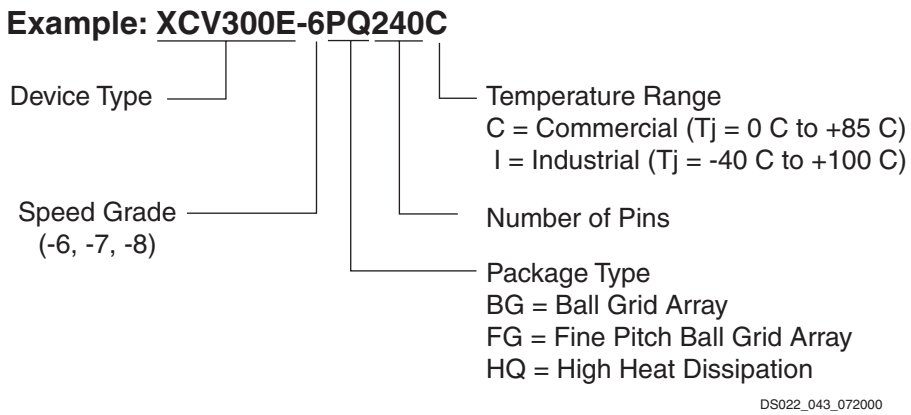

Figure 1: **Ordering Information**

Revision History

The following table shows the revision history for this document.

Date	Version	Revision
12/7/99	1.0	Initial Xilinx release.
1/10/00	1.1	Re-released with spd.txt v. 1.18, FG860/900/1156 package information, and additional DLL, Select RAM and SelectI/O information.
1/28/00	1.2	Added Delay Measurement Methodology table, updated SelectI/O section, Figures 30, 54, & 55, text explaining Table 5, T_{BYP} values, buffered Hex Line info, p. 8, I/O Timing Measurement notes, notes for Tables 15, 16, and corrected F1156 pinout table footnote references.
2/29/00	1.3	Updated pinout tables, V_{CC} page 20, and corrected Figure 20.
5/23/00	1.4	Correction to table on p. 22.
7/10/00	1.5	• Numerous minor edits. • Data sheet upgraded to Preliminary. • Preview -8 numbers added to **Virtex-E Electrical Characteristics** tables.
8/1/00	1.6	• Reformatted entire document to follow new style guidelines. • Changed speed grade values in tables on pages 35-37.
9/20/00	1.7	• Min values added to **Virtex-E Electrical Characteristics** tables. • XCV2600E and XCV3200E numbers added to **Virtex-E Electrical Characteristics** tables (Module 3). • Corrected user I/O count for XCV100E device in Table 1 (Module 1). • Changed several pins to “No Connect in the XCV100E“ and removed duplicate V_{CCINT} pins in Table ~ (Module 4). • Changed pin J10 to “No connect in XCV600E” in Table 74 (Module 4). • Changed pin J30 to “VREF option only in the XCV600E” in Table 74 (Module 4). • Corrected pair 18 in Table 75 (Module 4) to be “AO in the XCV1000E, XCV1600E“.

Date	Version	Revision
11/20/00	1.8	• Upgraded speed grade -8 numbers in **Virtex-E Electrical Characteristics** tables to Preliminary. • Updated minimums in Table 13 and added notes to Table 14. • Added to note 2 to **Absolute Maximum Ratings**. • Changed speed grade -8 numbers for $T_{SHCKO32}$, T_{REG}, T_{BCCS}, and T_{ICKOF}. • Changed all minimum hold times to –0.4 under **Global Clock Setup and Hold for LVTTL Standard, with DLL**. • Revised maximum T_{DLLPW} in -6 speed grade for **DLL Timing Parameters**. • Changed GCLK0 to BA22 for FG860 package in Table 46.
2/12/01	1.9	• Revised footnote for Table 14. • Added numbers to **Virtex-E Electrical Characteristics** tables for XCV1000E and XCV2000E devices. • Updated Table 27 and Table 78 to include values for XCV400E and XCV600E devices. • Revised Table 62 to include pinout information for the XCV400E and XCV600E devices in the BG560 package. • Updated footnotes 1 and 2 for Table 76 to include XCV2600E and XCV3200E devices.
4/2/01	2.0	• Updated numerous values in **Virtex-E Switching Characteristics** tables. • Converted data sheet to modularized format. See the **Virtex-E Data Sheet** section.
10/25/01	2.1	• Updated the **Virtex-E Device/Package Combinations and Maximum I/O** table to show XCV3200E in the FG1156 package.
11/09/01	2.2	• Minor edits.

Virtex-E Data Sheet

The Virtex-E Data Sheet contains the following modules:

- DS022-1, Virtex-E 1.8V FPGAs:
  Introduction and Ordering Information (Module 1)
- DS022-2, Virtex-E 1.8V FPGAs:
  Functional Description (Module 2)
- DS022-3, Virtex-E 1.8V FPGAs:
  DC and Switching Characteristics (Module 3)
- DS022-4, Virtex-E 1.8V FPGAs:
  Pinout Tables (Module 4)

Architectural Description

Virtex-E Array

The Virtex-E user-programmable gate array, shown in Figure 1, comprises two major configurable elements: configurable logic blocks (CLBs) and input/output blocks (IOBs).

- CLBs provide the functional elements for constructing logic
- IOBs provide the interface between the package pins and the CLBs

CLBs interconnect through a general routing matrix (GRM). The GRM comprises an array of routing switches located at the intersections of horizontal and vertical routing channels. Each CLB nests into a VersaBlock™ that also provides local routing resources to connect the CLB to the GRM.

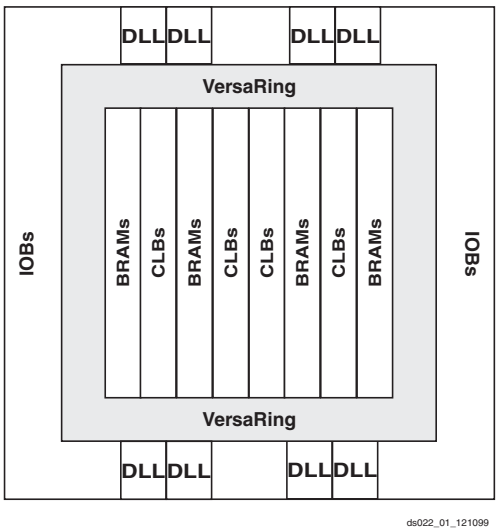

Figure 1: **Virtex-E Architecture Overview**

The VersaRing™ I/O interface provides additional routing resources around the periphery of the device. This routing improves I/O routability and facilitates pin locking.

The Virtex-E architecture also includes the following circuits that connect to the GRM.

- Dedicated block memories of 4096 bits each
- Clock DLLs for clock-distribution delay compensation and clock domain control
- 3-State buffers (BUFTs) associated with each CLB that drive dedicated segmentable horizontal routing resources

Values stored in static memory cells control the configurable logic elements and interconnect resources. These values load into the memory cells on power-up, and can reload if necessary to change the function of the device.

Input/Output Block

The Virtex-E IOB, Figure 2, features SelectI/O+ inputs and outputs that support a wide variety of I/O signalling standards, see Table 1.

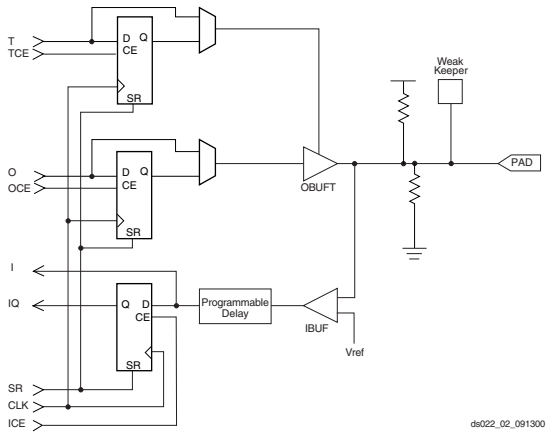

Figure 2: **Virtex-E Input/Output Block (IOB)**

The three IOB storage elements function either as edge-triggered D-type flip-flops or as level-sensitive latches. Each IOB has a clock signal (CLK) shared by the three flip-flops and independent clock enable signals for each flip-flop.

© 2001 Xilinx, Inc. All rights reserved. All Xilinx trademarks, registered trademarks, patents, and disclaimers are as listed at http://www.xilinx.com/legal.htm.
All other trademarks and registered trademarks are the property of their respective owners. All specifications are subject to change without notice.

Table 1: **Supported I/O Standards**

I/O Standard	Output V_{CCO}	Input V_{CCO}	Input V_{REF}	Board Termination Voltage (V_{TT})
LVTTL	3.3	3.3	N/A	N/A
LVCMOS2	2.5	2.5	N/A	N/A
LVCMOS18	1.8	1.8	N/A	N/A
SSTL3 I & II	3.3	N/A	1.50	1.50
SSTL2 I & II	2.5	N/A	1.25	1.25
GTL	N/A	N/A	0.80	1.20
GTL+	N/A	N/A	1.0	1.50
HSTL I	1.5	N/A	0.75	0.75
HSTL III & IV	1.5	N/A	0.90	1.50
CTT	3.3	N/A	1.50	1.50
AGP-2X	3.3	N/A	1.32	N/A
PCI33_3	3.3	3.3	N/A	N/A
PCI66_3	3.3	3.3	N/A	N/A
BLVDS & LVDS	2.5	N/A	N/A	N/A
LVPECL	3.3	N/A	N/A	N/A

In addition to the CLK and CE control signals, the three flip-flops share a Set/Reset (SR). For each flip-flop, this signal can be independently configured as a synchronous Set, a synchronous Reset, an asynchronous Preset, or an asynchronous Clear.

The output buffer and all of the IOB control signals have independent polarity controls.

All pads are protected against damage from electrostatic discharge (ESD) and from over-voltage transients. When PCI 3.3 V compliance is required, a conventional clamp diode is connected to the output supply voltage, V_{CCO}.

Optional pull-up, pull-down and weak-keeper circuits are attached to each pad. Prior to configuration all outputs not involved in configuration are forced into their high-impedance state. The pull-down resistors and the weak-keeper circuits are inactive, but I/Os can optionally be pulled up.

The activation of pull-up resistors prior to configuration is controlled on a global basis by the configuration mode pins. If the pull-up resistors are not activated, all the pins are in a high-impedance state. Consequently, external pull-up or pull-down resistors must be provided on pins required to be at a well-defined logic level prior to configuration.

All Virtex-E IOBs support IEEE 1149.1-compatible boundary scan testing.

Input Path

The Virtex-E IOB input path routes the input signal directly to internal logic and/ or through an optional input flip-flop.

An optional delay element at the D-input of this flip-flop eliminates pad-to-pad hold time. The delay is matched to the internal clock-distribution delay of the FPGA, and when used, assures that the pad-to-pad hold time is zero.

Each input buffer can be configured to conform to any of the low-voltage signalling standards supported. In some of these standards the input buffer utilizes a user-supplied threshold voltage, V_{REF}. The need to supply V_{REF} imposes constraints on which standards can be used in close proximity to each other. <Link>See “I/O Banking” on page 2.

There are optional pull-up and pull-down resistors at each input for use after configuration. Their value is in the range 50 – 100 kΩ.

Output Path

The output path includes a 3-state output buffer that drives the output signal onto the pad. The output signal can be routed to the buffer directly from the internal logic or through an optional IOB output flip-flop.

The 3-state control of the output can also be routed directly from the internal logic or through a flip-flip that provides synchronous enable and disable.

Each output driver can be individually programmed for a wide range of low-voltage signalling standards. Each output buffer can source up to 24 mA and sink up to 48 mA. Drive strength and slew rate controls minimize bus transients.

In most signalling standards, the output High voltage depends on an externally supplied V_{CCO} voltage. The need to supply V_{CCO} imposes constraints on which standards can be used in close proximity to each other. <Link>See “I/O Banking” on page 2.

An optional weak-keeper circuit is connected to each output. When selected, the circuit monitors the voltage on the pad and weakly drives the pin High or Low to match the input signal. If the pin is connected to a multiple-source signal, the weak keeper holds the signal in its last state if all drivers are disabled. Maintaining a valid logic level in this way eliminates bus chatter.

Since the weak-keeper circuit uses the IOB input buffer to monitor the input level, an appropriate V_{REF} voltage must be provided if the signalling standard requires one. The provision of this voltage must comply with the I/O banking rules.

I/O Banking

Some of the I/O standards described above require V_{CCO} and/or V_{REF} voltages. These voltages are externally supplied and connected to device pins that serve groups of IOBs, called banks. Consequently, restrictions exist about which I/O standards can be combined within a given bank.

Eight I/O banks result from separating each edge of the FPGA into two banks, as shown in Figure 3. Each bank has multiple V_{CCO} pins, all of which must be connected to the same voltage. This voltage is determined by the output standards in use.

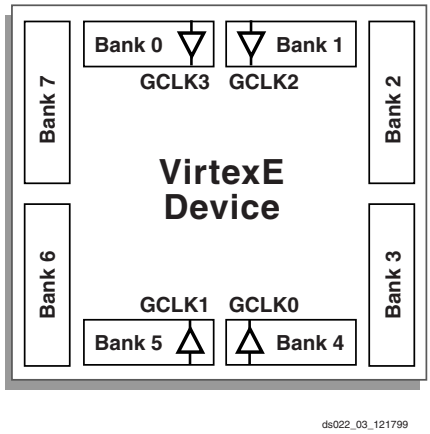

Figure 3: **Virtex-E I/O Banks**

Within a bank, output standards can be mixed only if they use the same V_{CCO}. Compatible standards are shown in Table 2. GTL and GTL+ appear under all voltages because their open-drain outputs do not depend on V_{CCO}.

Table 2: **Compatible Output Standards**

V_{CCO}	Compatible Standards
3.3 V	PCI, LVTTL, SSTL3 I, SSTL3 II, CTT, AGP, GTL, GTL+, LVPECL
2.5 V	SSTL2 I, SSTL2 II, LVCMOS2, GTL, GTL+, BLVDS, LVDS
1.8 V	LVCMOS18, GTL, GTL+
1.5 V	HSTL I, HSTL III, HSTL IV, GTL, GTL+

Some input standards require a user-supplied threshold voltage, V_{REF}. In this case, certain user-I/O pins are automatically configured as inputs for the V_{REF} voltage. Approximately one in six of the I/O pins in the bank assume this role.

The V_{REF} pins within a bank are interconnected internally and consequently only one V_{REF} voltage can be used within each bank. All V_{REF} pins in the bank, however, must be connected to the external voltage source for correct operation.

Within a bank, inputs that require V_{REF} can be mixed with those that do not. However, only one V_{REF} voltage can be used within a bank.

In Virtex-E, input buffers with LVTTL, LVCMOS2, LVCMOS18, PCI33_3, PCI66_3 standards are supplied by V_{CCO} rather than V_{CCINT}. For these standards, only input and output buffers that have the same V_{CCO} can be mixed together.

The V_{CCO} and V_{REF} pins for each bank appear in the device pin-out tables and diagrams. The diagrams also show the bank affiliation of each I/O.

Within a given package, the number of V_{REF} and V_{CCO} pins can vary depending on the size of device. In larger devices, more I/O pins convert to V_{REF} pins. Since these are always a super set of the V_{REF} pins used for smaller devices, it is possible to design a PCB that permits migration to a larger device if necessary. All the V_{REF} pins for the largest device anticipated must be connected to the V_{REF} voltage, and not used for I/O.

In smaller devices, some V_{CCO} pins used in larger devices do not connect within the package. These unconnected pins can be left unconnected externally, or can be connected to the V_{CCO} voltage to permit migration to a larger device if necessary.

Configurable Logic Blocks

The basic building block of the Virtex-E CLB is the logic cell (LC). An LC includes a 4-input function generator, carry logic, and a storage element. The output from the function generator in each LC drives both the CLB output and the D input of the flip-flop. Each Virtex-E CLB contains four LCs, organized in two similar slices, as shown in Figure 4. Figure 5 shows a more detailed view of a single slice.

In addition to the four basic LCs, the Virtex-E CLB contains logic that combines function generators to provide functions of five or six inputs. Consequently, when estimating the number of system gates provided by a given device, each CLB counts as 4.5 LCs.

Look-Up Tables

Virtex-E function generators are implemented as 4-input look-up tables (LUTs). In addition to operating as a function generator, each LUT can provide a 16 x 1-bit synchronous RAM. Furthermore, the two LUTs within a slice can be combined to create a 16 x 2-bit or 32 x 1-bit synchronous RAM, or a 16 x 1-bit dual-port synchronous RAM.

The Virtex-E LUT can also provide a 16-bit shift register that is ideal for capturing high-speed or burst-mode data. This mode can also be used to store data in applications such as Digital Signal Processing.

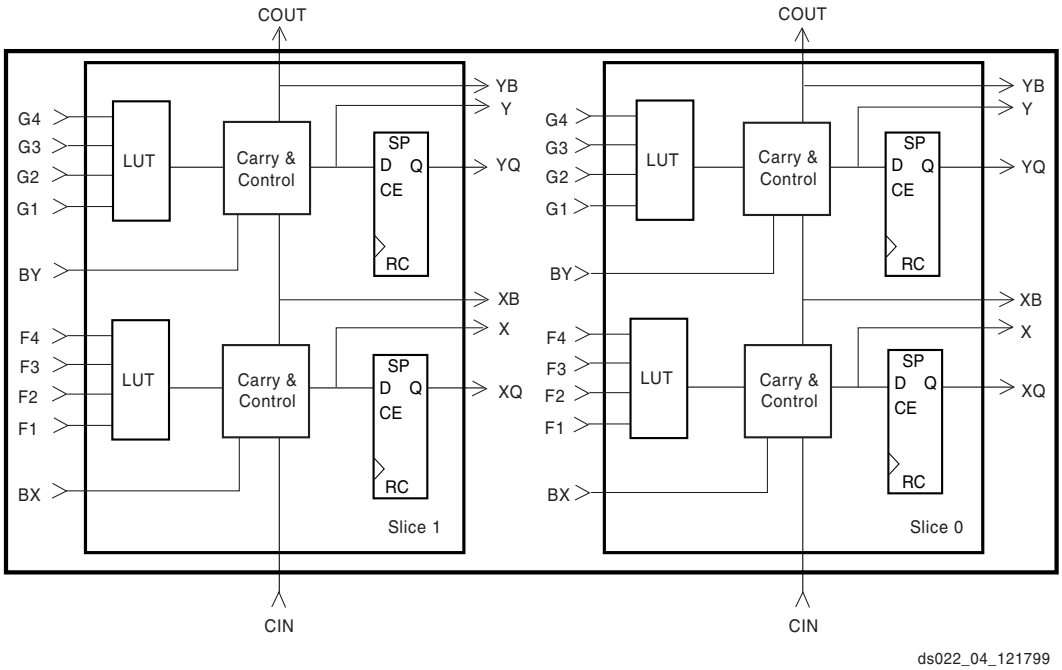

Figure 4: **2-Slice Virtex-E CLB**

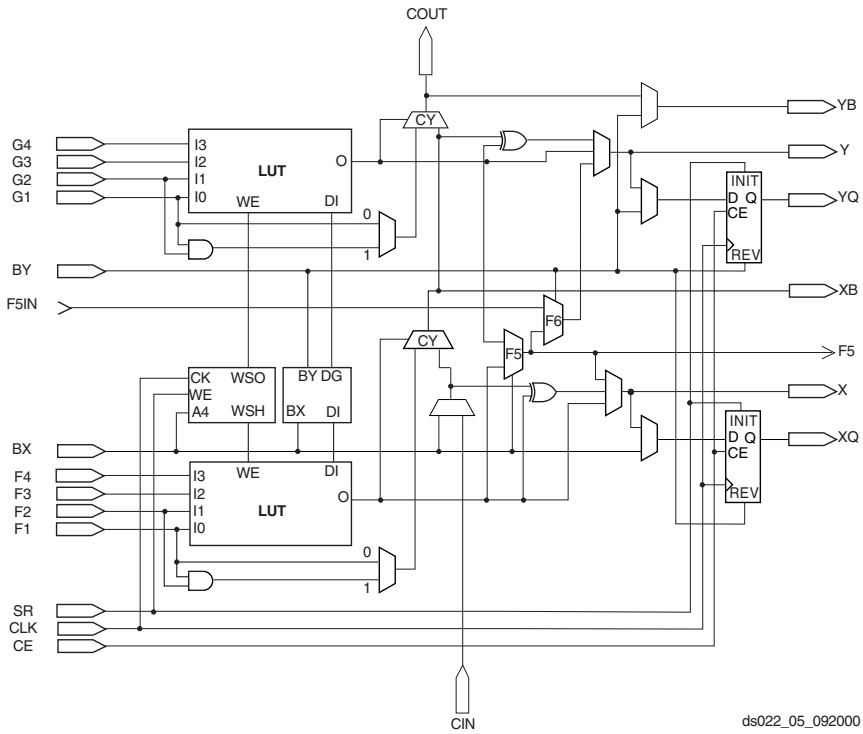

Figure 5: **Detailed View of Virtex-E Slice**

Storage Elements

The storage elements in the Virtex-E slice can be configured either as edge-triggered D-type flip-flops or as level-sensitive latches. The D inputs can be driven either by the function generators within the slice or directly from slice inputs, bypassing the function generators.

In addition to Clock and Clock Enable signals, each Slice has synchronous set and reset signals (SR and BY). SR

forces a storage element into the initialization state specified for it in the configuration. BY forces it into the opposite state. Alternatively, these signals can be configured to operate asynchronously. All of the control signals are independently invertible, and are shared by the two flip-flops within the slice.

Additional Logic

The F5 multiplexer in each slice combines the function generator outputs. This combination provides either a function generator that can implement any 5-input function, a 4:1 multiplexer, or selected functions of up to nine inputs.

Similarly, the F6 multiplexer combines the outputs of all four function generators in the CLB by selecting one of the F5-multiplexer outputs. This permits the implementation of any 6-input function, an 8:1 multiplexer, or selected functions of up to 19 inputs.

Each CLB has four direct feedthrough paths, two per slice. These paths provide extra data input lines or additional local routing that does not consume logic resources.

Arithmetic Logic

Dedicated carry logic provides fast arithmetic carry capability for high-speed arithmetic functions. The Virtex-E CLB supports two separate carry chains, one per Slice. The height of the carry chains is two bits per CLB.

The arithmetic logic includes an XOR gate that allows a 2-bit full adder to be implemented within a slice. In addition, a dedicated AND gate improves the efficiency of multiplier implementation. The dedicated carry path can also be used to cascade function generators for implementing wide logic functions.

BUFTs

Each Virtex-E CLB contains two 3-state drivers (BUFTs) that can drive on-chip busses. <Link>See “Dedicated Routing” on page 7. Each Virtex-E BUFT has an independent 3-state control pin and an independent input pin.

Block SelectRAM

Virtex-E FPGAs incorporate large block SelectRAM memories. These complement the Distributed SelectRAM memories that provide shallow RAM structures implemented in CLBs.

Block SelectRAM memory blocks are organized in columns, starting at the left (column 0) and right outside edges and inserted every 12 CLB columns (see notes for smaller devices). Each memory block is four CLBs high, and each memory column extends the full height of the chip, immediately adjacent (to the right, except for column 0) of the CLB column locations indicated in Table 3.

Table 3: **CLB/Block RAM Column Locations**

XCV Device /Col.	0	12	24	36	48	60	72	84	96	108	120	138	156
50E	Columns 0, 6, 18, & 24												
100E	Columns 0, 12, 18, & 30												
200E	Columns 0, 12, 30, & 42												
300E	√	√		√	√								
400E	√	√			√	√							
600E	√	√	√		√	√	√						
1000E	√	√	√				√	√	√				
1600E	√	√	√	√			√	√	√	√			
2000E	√	√	√	√				√	√	√	√		
2600E	√	√	√	√					√	√	√	√	
3200E	√	√	√	√						√	√	√	√

Table 4 shows the amount of block SelectRAM memory that is available in each Virtex-E device.

Table 4: **Virtex-E Block SelectRAM Amounts**

Virtex-E Device	# of Blocks	Block SelectRAM Bits
XCV50E	16	65,536
XCV100E	20	81,920
XCV200E	28	114,688
XCV300E	32	131,072
XCV400E	40	163,840
XCV600E	72	294,912
XCV1000E	96	393,216
XCV1600E	144	589,824
XCV2000E	160	655,360
XCV2600E	184	753,664
XCV3200E	208	851,968

As illustrated in Figure 6, each block SelectRAM cell is a fully synchronous dual-ported (True Dual Port™) 4096-bit RAM with independent control signals for each port. The data widths of the two ports can be configured independently, providing built-in bus-width conversion.

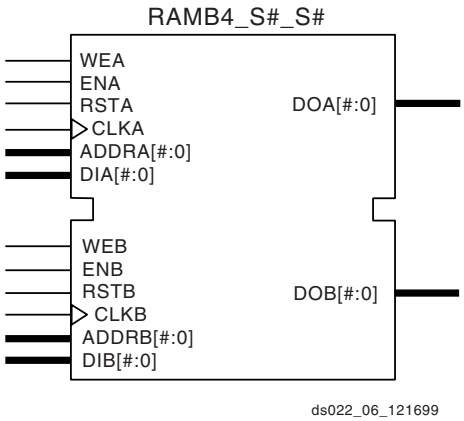

Figure 6: **Dual-Port Block SelectRAM**

Table 5 shows the depth and width aspect ratios for the block SelectRAM. The Virtex-E block SelectRAM also includes dedicated routing to provide an efficient interface with both CLBs and other block SelectRAMs.

Table 5: **Block SelectRAM Port Aspect Ratios**

Width	Depth	ADDR Bus	Data Bus
1	4096	ADDR<11:0>	DATA<0>
2	2048	ADDR<10:0>	DATA<1:0>
4	1024	ADDR<9:0>	DATA<3:0>
8	512	ADDR<8:0>	DATA<7:0>
16	256	ADDR<7:0>	DATA<15:0>

Programmable Routing Matrix

It is the longest delay path that limits the speed of any worst-case design. Consequently, the Virtex-E routing architecture and its place-and-route software were defined in a joint optimization process. This joint optimization minimizes long-path delays, and consequently, yields the best system performance.

The joint optimization also reduces design compilation times because the architecture is software-friendly. Design cycles are correspondingly reduced due to shorter design iteration times.

Local Routing

The VersaBlock provides local routing resources (see Figure 7), providing three types of connections:

- Interconnections among the LUTs, flip-flops, and GRM
- Internal CLB feedback paths that provide high-speed connections to LUTs within the same CLB, chaining them together with minimal routing delay
- Direct paths that provide high-speed connections between horizontally adjacent CLBs, eliminating the delay of the GRM.

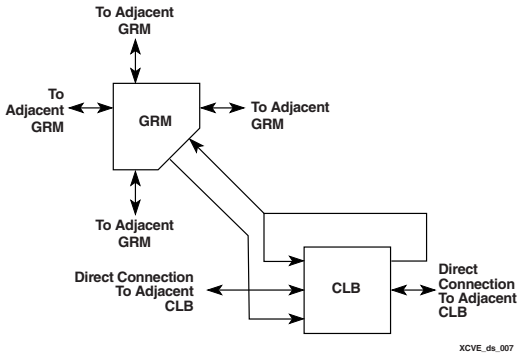

Figure 7: **Virtex-E Local Routing**

General Purpose Routing

Most Virtex-E signals are routed on the general purpose routing, and consequently, the majority of interconnect resources are associated with this level of the routing hierarchy. General-purpose routing resources are located in horizontal and vertical routing channels associated with the CLB rows and columns and are as follows:

- Adjacent to each CLB is a General Routing Matrix (GRM). The GRM is the switch matrix through which horizontal and vertical routing resources connect, and is also the means by which the CLB gains access to the general purpose routing.
- 24 single-length lines route GRM signals to adjacent GRMs in each of the four directions.
- 72 buffered Hex lines route GRM signals to another GRMs six-blocks away in each one of the four directions. Organized in a staggered pattern, Hex lines are driven only at their endpoints. Hex-line signals can be accessed either at the endpoints or at the midpoint (three blocks from the source). One third of the Hex lines are bidirectional, while the remaining ones are uni-directional.
- 12 Longlines are buffered, bidirectional wires that distribute signals across the device quickly and efficiently. Vertical Longlines span the full height of the device, and horizontal ones span the full width of the device.

I/O Routing

Virtex-E devices have additional routing resources around their periphery that form an interface between the CLB array and the IOBs. This additional routing, called the VersaRing, facilitates pin-swapping and pin-locking, such that logic redesigns can adapt to existing PCB layouts. Time-to-market is reduced, since PCBs and other system components can be manufactured while the logic design is still in progress.

Dedicated Routing

Some classes of signal require dedicated routing resources to maximize performance. In the Virtex-E architecture, dedicated routing resources are provided for two classes of signal.

- Horizontal routing resources are provided for on-chip 3-state busses. Four partitionable bus lines are provided per CLB row, permitting multiple busses within a row, as shown in Figure 8.
- Two dedicated nets per CLB propagate carry signals vertically to the adjacent CLB.Global Clock Distribution Network
- DLL Location

Clock Routing

Clock Routing resources distribute clocks and other signals with very high fanout throughout the device. Virtex-E devices include two tiers of clock routing resources referred to as global and local clock routing resources.

- The global routing resources are four dedicated global nets with dedicated input pins that are designed to distribute high-fanout clock signals with minimal skew. Each global clock net can drive all CLB, IOB, and block RAM clock pins. The global nets can be driven only by global buffers. There are four global buffers, one for each global net.
- The local clock routing resources consist of 24 backbone lines, 12 across the top of the chip and 12 across bottom. From these lines, up to 12 unique signals per column can be distributed via the 12 longlines in the column. These local resources are more flexible than the global resources since they are not restricted to routing only to clock pins.

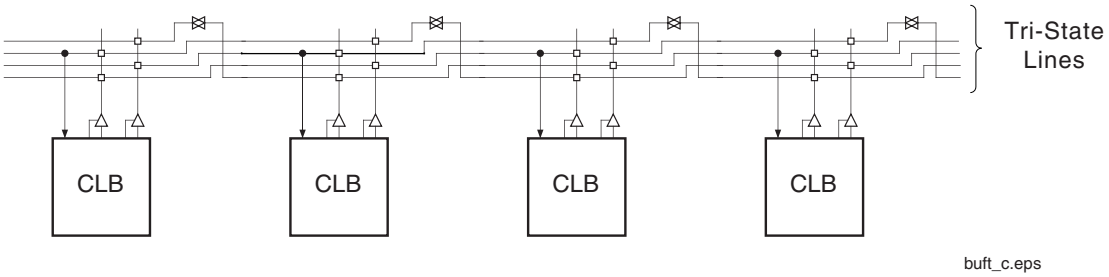

Figure 8: **BUFT Connections to Dedicated Horizontal Bus LInes**

Global Clock Distribution

Virtex-E provides high-speed, low-skew clock distribution through the global routing resources described above. A typical clock distribution net is shown in Figure 9.

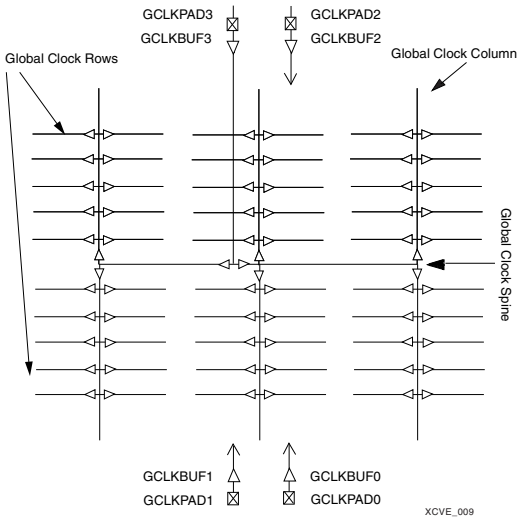

Figure 9: **Global Clock Distribution Network**

Four global buffers are provided, two at the top center of the device and two at the bottom center. These drive the four global nets that in turn drive any clock pin.

Four dedicated clock pads are provided, one adjacent to each of the global buffers. The input to the global buffer is selected either from these pads or from signals in the general purpose routing.

Digital Delay-Locked Loops

There are eight DLLs (Delay-Locked Loops) per device, with four located at the top and four at the bottom, Figure 10. The DLLs can be used to eliminate skew between the clock input pad and the internal clock input pins throughout the device. Each DLL can drive two global clock networks.The DLL monitors the input clock and the distributed clock, and automatically adjusts a clock delay element. Additional delay is introduced such that clock edges arrive at internal flip-flops synchronized with clock edges arriving at the input.

In addition to eliminating clock-distribution delay, the DLL provides advanced control of multiple clock domains. The DLL provides four quadrature phases of the source clock, and can double the clock or divide the clock by 1.5, 2, 2.5, 3, 4, 5, 8, or 16.

The DLL also operates as a clock mirror. By driving the output from a DLL off-chip and then back on again, the DLL can be used to de-skew a board level clock among multiple devices.

To guarantee that the system clock is operating correctly prior to the FPGA starting up after configuration, the DLL can delay the completion of the configuration process until after it has achieved lock. For more information about DLL functionality, see the Design Consideration section of the data sheet.

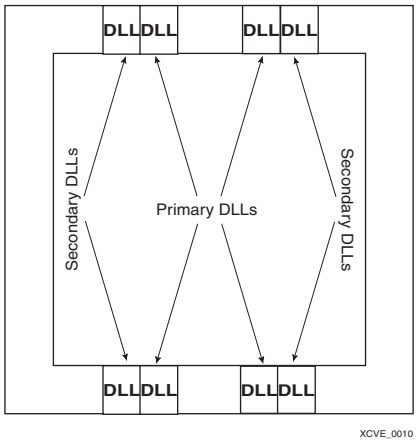

Figure 10: **DLL Locations**

Boundary Scan

Virtex-E devices support all the mandatory boundary-scan instructions specified in the IEEE standard 1149.1. A Test Access Port (TAP) and registers are provided that implement the EXTEST, INTEST, SAMPLE/PRELOAD, BYPASS, IDCODE, USERCODE, and HIGHZ instructions. The TAP also supports two internal scan chains and configuration/readback of the device.

The JTAG input pins (TDI, TMS, TCK) do not have a V_{CCO} requirement and operate with either 2.5 V or 3.3 V input signalling levels. The output pin (TDO) is sourced from the V_{CCO} in bank 2, and for proper operation of LVTTL 3.3 V levels, the bank should be supplied with 3.3 V.

Boundary-scan operation is independent of individual IOB configurations, and unaffected by package type. All IOBs, including un-bonded ones, are treated as independent 3-state bidirectional pins in a single scan chain. Retention of the bidirectional test capability after configuration facilitates the testing of external interconnections.

Table 6 lists the boundary-scan instructions supported in Virtex-E FPGAs. Internal signals can be captured during EXTEST by connecting them to un-bonded or unused IOBs. They can also be connected to the unused outputs of IOBs defined as unidirectional input pins.

Before the device is configured, all instructions except USER1 and USER2 are available. After configuration, all instructions are available. During configuration, it is recommended that those operations using the boundary-scan register (SAMPLE/PRELOAD, INTEST, EXTEST) not be performed.

In addition to the test instructions outlined above, the boundary-scan circuitry can be used to configure the FPGA, and also to read back the configuration data.

Figure 11 is a diagram of the Virtex-E Series boundary scan logic. It includes three bits of Data Register per IOB, the IEEE 1149.1 Test Access Port controller, and the Instruction Register with decodes.

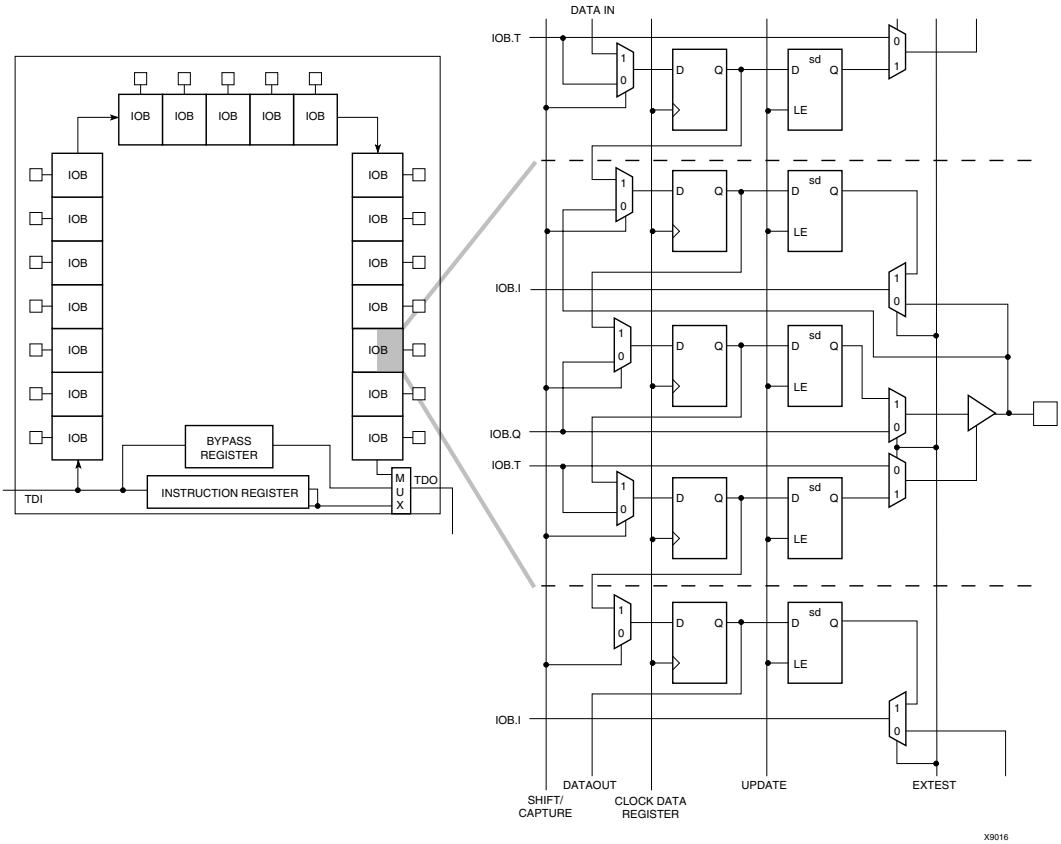

Figure 11: **Virtex-E Family Boundary Scan Logic**

Instruction Set

The Virtex-E Series boundary scan instruction set also includes instructions to configure the device and read back configuration data (CFG_IN, CFG_OUT, and JSTART). The complete instruction set is coded as shown in Table 6..

Table 6: **Boundary Scan Instructions**

Boundary-Scan Command	Binary Code(4:0)	Description
EXTEST	00000	Enables boundary-scan EXTEST operation
SAMPLE/ PRELOAD	00001	Enables boundary-scan SAMPLE/PRELOAD operation
USER1	00010	Access user-defined register 1
USER2	00011	Access user-defined register 2
CFG_OUT	00100	Access the configuration bus for read operations.

Table 6: **Boundary Scan Instructions *(Continued)***

Boundary-Scan Command	Binary Code(4:0)	Description
CFG_IN	00101	Access the configuration bus for write operations.
INTEST	00111	Enables boundary-scan INTEST operation
USERCODE	01000	Enables shifting out USER code
IDCODE	01001	Enables shifting out of ID Code
HIGHZ	01010	3-states output pins while enabling the Bypass Register
JSTART	01100	Clock the start-up sequence when StartupClk is TCK
BYPASS	11111	Enables BYPASS
RESERVED	All other codes	Xilinx reserved instructions

Data Registers

The primary data register is the boundary scan register. For each IOB pin in the FPGA, bonded or not, it includes three bits for In, Out, and 3-State Control. Non-IOB pins have appropriate partial bit population if input-only or output-only. Each EXTEST CAPTURED-OR state captures all In, Out, and 3-state pins.

The other standard data register is the single flip-flop BYPASS register. It synchronizes data being passed through the FPGA to the next downstream boundary scan device.

The FPGA supports up to two additional internal scan chains that can be specified using the BSCAN macro. The macro provides two user pins (SEL1 and SEL2) which are decodes of the USER1 and USER2 instructions respectively. For these instructions, two corresponding pins (T DO1 and TDO2) allow user scan data to be shifted out of TDO.

Likewise, there are individual clock pins (DRCK1 and DRCK2) for each user register. There is a common input pin (TDI) and shared output pins that represent the state of the TAP controller (RESET, SHIFT, and UPDATE).

Bit Sequence

The order within each IOB is: In, Out, 3-State. The input-only pins contribute only the In bit to the boundary scan I/O data register, while the output-only pins contributes all three bits.

From a cavity-up view of the chip (as shown in EPIC), starting in the upper right chip corner, the boundary scan data-register bits are ordered as shown in Figure 12.

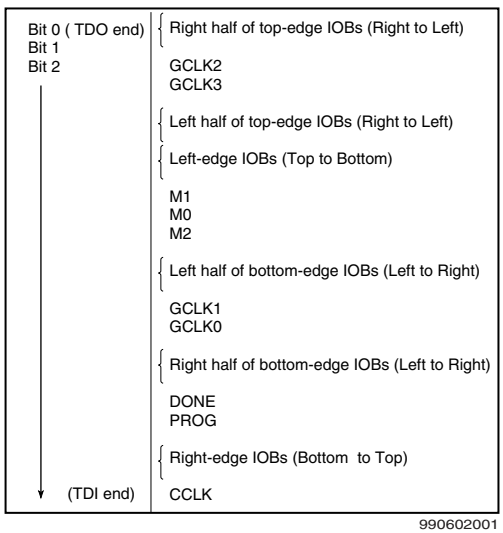

Figure 12: **Boundary Scan Bit Sequence**

BSDL (Boundary Scan Description Language) files for Virtex-E Series devices are available on the Xilinx web site in the File Download area.

Identification Registers

The IDCODE register is supported. By using the IDCODE, the device connected to the JTAG port can be determined.

The IDCODE register has the following binary format:

vvvv:ffff:fffa:aaaa:aaaa:cccc:cccc:ccc1

where

v = the die version number

f = the family code (05 for Virtex-E family)

a = the number of CLB rows (ranges from 16 for XCV50E to 104 for XCV3200E)

c = the company code (49h for Xilinx)

The USERCODE register is supported. By using the USERCODE, a user-programmable identification code can be loaded and shifted out for examination. The identification code (see Table 7) is embedded in the bitstream during bitstream generation and is valid only after configuration.

Table 7: **IDCODEs Assigned to Virtex-E FPGAs**

FPGA	IDCODE
XCV50E	v0A10093h
XCV100E	v0A14093h
XCV200E	v0A1C093h
XCV300E	v0A20093h
XCV400E	v0A28093h
XCV600E	v0A30093h
XCV1000E	v0A40093h
XCV1600E	v0A48093h
XCV2000E	v0A50093h
XCV2600E	v0A5C093h
XCV3200E	v0A68093h

Note:
Attempting to load an incorrect bitstream causes configuration to fail and can damage the device.

Including Boundary Scan in a Design

Since the boundary scan pins are dedicated, no special element needs to be added to the design unless an internal data register (USER1 or USER2) is desired.

If an internal data register is used, insert the boundary scan symbol and connect the necessary pins as appropriate.

Development System

Virtex-E FPGAs are supported by the Xilinx Foundation and Alliance Series CAE tools. The basic methodology for Virtex-E design consists of three interrelated steps: design entry, implementation, and verification. Industry-standard tools are used for design entry and simulation (for example, Synopsys FPGA Express), while Xilinx provides proprietary architecture-specific tools for implementation.

The Xilinx development system is integrated under the Xilinx Design Manager (XDM™) software, providing designers with a common user interface regardless of their choice of entry and verification tools. The XDM software simplifies the selection of implementation options with pull-down menus and on-line help.

Application programs ranging from schematic capture to Placement and Routing (PAR) can be accessed through the XDM software. The program command sequence is generated prior to execution, and stored for documentation.

Several advanced software features facilitate Virtex-E design. RPMs, for example, are schematic-based macros with relative location constraints to guide their placement. They help ensure optimal implementation of common functions.

For HDL design entry, the Xilinx FPGA Foundation development system provides interfaces to the following synthesis design environments.

- Synopsys (FPGA Compiler, FPGA Express)
- Exemplar (Spectrum)
- Synplicity (Synplify)

For schematic design entry, the Xilinx FPGA Foundation and Alliance development system provides interfaces to the following schematic-capture design environments.

- Mentor Graphics V8 (Design Architect, QuickSim II)
- Viewlogic Systems (Viewdraw)

Third-party vendors support many other environments.

A standard interface-file specification, Electronic Design Interchange Format (EDIF), simplifies file transfers into and out of the development system.

Virtex-E FPGAs are supported by a unified library of standard functions. This library contains over 400 primitives and macros, ranging from 2-input AND gates to 16-bit accumulators, and includes arithmetic functions, comparators, counters, data registers, decoders, encoders, I/O functions, latches, Boolean functions, multiplexers, shift registers, and barrel shifters.

The “soft macro” portion of the library contains detailed descriptions of common logic functions, but does not contain any partitioning or placement information. The performance of these macros depends, therefore, on the partitioning and placement obtained during implementation.

RPMs, on the other hand, do contain predetermined partitioning and placement information that permits optimal implementation of these functions. Users can create their own library of soft macros or RPMs based on the macros and primitives in the standard library.

The design environment supports hierarchical design entry, with high-level schematics that comprise major functional blocks, while lower-level schematics define the logic in these blocks. These hierarchical design elements are automatically combined by the implementation tools. Different design entry tools can be combined within a hierarchical design, thus allowing the most convenient entry method to be used for each portion of the design.

Design Implementation

The place-and-route tools (PAR) automatically provide the implementation flow described in this section. The partitioner takes the EDIF net list for the design and maps the logic into the architectural resources of the FPGA (CLBs and IOBs, for example). The placer then determines the best locations for these blocks based on their interconnections and the desired performance. Finally, the router interconnects the blocks.

The PAR algorithms support fully automatic implementation of most designs. For demanding applications, however, the user can exercise various degrees of control over the process. User partitioning, placement, and routing information is optionally specified during the design-entry process. The implementation of highly structured designs can benefit greatly from basic floor planning.

The implementation software incorporates Timing Wizard® timing-driven placement and routing. Designers specify timing requirements along entire paths during design entry. The timing path analysis routines in PAR then recognize these user-specified requirements and accommodate them.

Timing requirements are entered on a schematic in a form directly relating to the system requirements, such as the targeted clock frequency, or the maximum allowable delay between two registers. In this way, the overall performance of the system along entire signal paths is automatically tailored to user-generated specifications. Specific timing information for individual nets is unnecessary.

Design Verification

In addition to conventional software simulation, FPGA users can use in-circuit debugging techniques. Because Xilinx devices are infinitely reprogrammable, designs can be verified in real time without the need for extensive sets of software simulation vectors.

The development system supports both software simulation and in-circuit debugging techniques. For simulation, the system extracts the post-layout timing information from the design database, and back-annotates this information into the net list for use by the simulator. Alternatively, the user can verify timing-critical portions of the design using the TRCE® static timing analyzer.

For in-circuit debugging, an optional download and readback cable is available. This cable connects the FPGA in the target system to a PC or workstation. After downloading the design into the FPGA, the designer can single-step the logic, readback the contents of the flip-flops, and so observe the internal logic state. Simple modifications can be downloaded into the system in a matter of minutes.

Configuration

Virtex-E devices are configured by loading configuration data into the internal configuration memory. Note that attempting to load an incorrect bitstream causes configuration to fail and can damage the device.

Some of the pins used for configuration are dedicated pins, while others can be re-used as general purpose inputs and outputs once configuration is complete.

The following are dedicated pins:

- Mode pins (M2, M1, M0)
- Configuration clock pin (CCLK)
- $\overline{\text{PROGRAM}}$ pin
- DONE pin
- Boundary-scan pins (TDI, TDO, TMS, TCK)

Depending on the configuration mode chosen, CCLK can be an output generated by the FPGA, or can be generated externally and provided to the FPGA as an input.

For correct operation, these pins require a V_{CCO} of 3.3 V or 2.5 V. At 3.3 V the pins operate as LVTTL, and at 2.5 V they operate as LVCMOS. All affected pins fall in banks 2 or 3.

Configuration Modes

Virtex-E supports the following four configuration modes.

- Slave-serial mode
- Master-serial mode
- SelectMAP mode
- Boundary-scan mode (JTAG)

The Configuration mode pins (M2, M1, M0) select among these configuration modes with the option in each case of having the IOB pins either pulled up or left floating prior to configuration. The selection codes are listed in Table 8.

Configuration through the boundary-scan port is always available, independent of the mode selection. Selecting the boundary-scan mode simply turns off the other modes. The three mode pins have internal pull-up resistors, and default to a logic High if left unconnected.

Table 8: **Configuration Codes**

Configuration Mode	M2	M1	M0	CCLK Direction	Data Width	Serial D_{out}	Configuration Pull-ups
Master-serial mode	0	0	0	Out	1	Yes	No
Boundary-scan mode	1	0	1	N/A	1	No	No
SelectMAP mode	1	1	0	In	8	No	No
Slave-serial mode	1	1	1	In	1	Yes	No
Master-serial mode	1	0	0	Out	1	Yes	Yes
Boundary-scan mode	0	0	1	N/A	1	No	Yes
SelectMAP mode	0	1	0	In	8	No	Yes
Slave-serial mode	0	1	1	In	1	Yes	Yes

Table 9 lists the total number of bits required to configure each device.

Table 9: **Virtex-E Bitstream Lengths**

Device	# of Configuration Bits
XCV50E	630,048
XCV100E	863,840
XCV200E	1,442,016
XCV300E	1, 875,648
XCV400E	2,693,440
XCV600E	3,961,632
XCV1000E	6,587,520
XCV1600E	8,308,992
XCV2000E	10,159,648
XCV2600E	12,922,336
XCV3200E	16,283,712

Slave-Serial Mode

In slave-serial mode, the FPGA receives configuration data in bit-serial form from a serial PROM or other source of serial configuration data. The serial bitstream must be set up at the DIN input pin a short time before each rising edge of an externally generated CCLK.

For more information on serial PROMs, see the PROM data sheet at http://www.xilinx.com/partinfo/ds026.pdf.

Multiple FPGAs can be daisy-chained for configuration from a single source. After a particular FPGA has been configured, the data for the next device is routed to the DOUT pin. The data on the DOUT pin changes on the rising edge of CCLK.

The change of DOUT on the rising edge of CCLK differs from previous families, but does not cause a problem for mixed configuration chains. This change was made to improve serial configuration rates for Virtex and Virtex-E only chains.

Figure 13 shows a full master/slave system. A Virtex-E device in slave-serial mode should be connected as shown in the right-most device.

Slave-serial mode is selected by applying <111> or <011> to the mode pins (M2, M1, M0). A weak pull-up on the mode pins makes slave serial the default mode if the pins are left unconnected. Figure 14 shows slave-serial configuration timing.

Table 10 provides more detail about the characteristics shown in Figure 14. Configuration must be delayed until the $\overline{\text{INIT}}$ pins of all daisy-chained FPGAs are High.

Table 10: **Master/Slave Serial Mode Programming Switching**

	Description	Figure References	Symbol	Values	Units
CCLK	DIN setup/hold, slave mode	1/2	T_{DCC}/T_{CCD}	5.0 / 0.0	ns, min
	DIN setup/hold, master mode	1/2	T_{DSCK}/T_{CKDS}	5.0 / 0.0	ns, min
	DOUT	3	T_{CCO}	12.0	ns, max
	High time	4	T_{CCH}	5.0	ns, min
	Low time	5	T_{CCL}	5.0	ns, min
	Maximum Frequency		F_{CC}	66	MHz, max
	Frequency Tolerance, master mode with respect to nominal			+45% –30%	

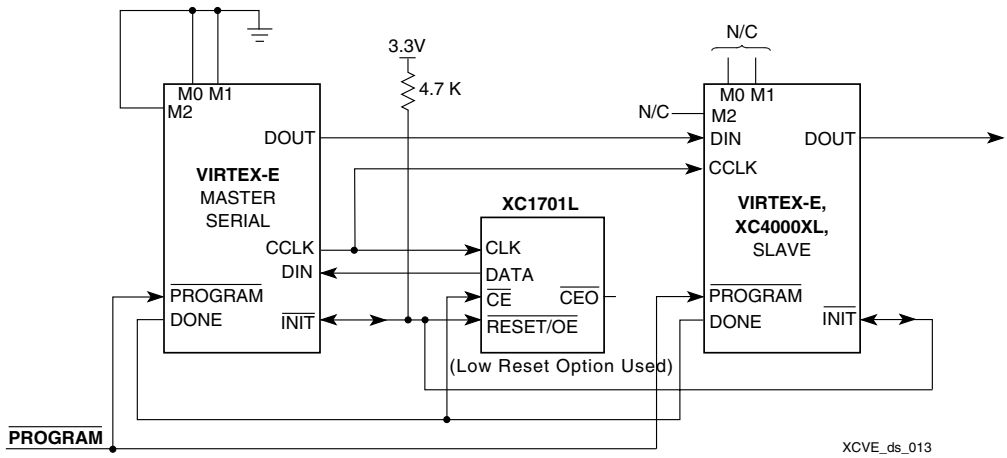

Figure 13: **Master/Slave Serial Mode Circuit Diagram**

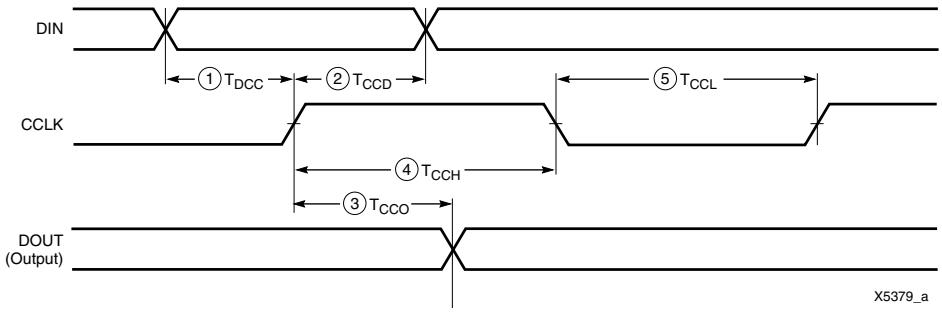

Figure 14: **Slave-Serial Mode Programming Switching Characteristics**

Master-Serial Mode

In master-serial mode, the CCLK output of the FPGA drives a Xilinx Serial PROM that feeds bit-serial data to the DIN input. The FPGA accepts this data on each rising CCLK edge. After the FPGA has been loaded, the data for the next device in a daisy-chain is presented on the DOUT pin after the rising CCLK edge.

The interface is identical to slave-serial except that an internal oscillator is used to generate the configuration clock (CCLK). A wide range of frequencies can be selected for CCLK, which always starts at a slow default frequency. Configuration bits then switch CCLK to a higher frequency for the remainder of the configuration. Switching to a lower frequency is prohibited.

The CCLK frequency is set using the ConfigRate option in the bitstream generation software. The maximum CCLK frequency that can be selected is 60 MHz. When selecting a CCLK frequency, ensure that the serial PROM and any daisy-chained FPGAs are fast enough to support the clock rate.

On power-up, the CCLK frequency is approximately 2.5 MHz. This frequency is used until the ConfigRate bits have been loaded when the frequency changes to the selected ConfigRate. Unless a different frequency is specified in the design, the default ConfigRate is 4 MHz.

In a full master/slave system (Figure 13), the left-most device operates in master-serial mode. The remaining devices operate in slave-serial mode. The SPROM $\overline{\text{RESET}}$ pin is driven by $\overline{\text{INIT}}$, and the $\overline{\text{CE}}$ input is driven by DONE. There is the potential for contention on the DONE pin, depending on the start-up sequence options chosen.

The sequence of operations necessary to configure a Virtex-E FPGA serially appears in Figure 15.

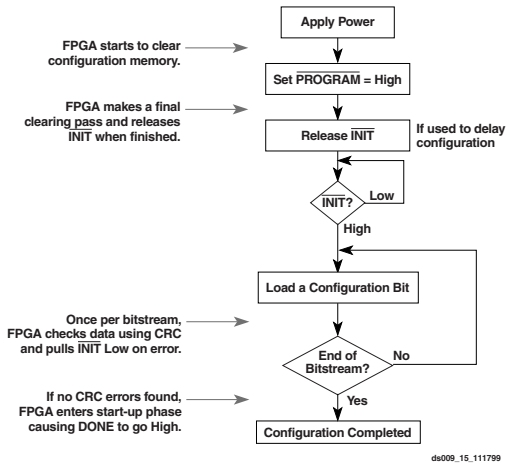

Figure 15: **Serial Configuration Flowchart**

Figure 16 shows the timing of master-serial configuration. Master-serial mode is selected by a <000> or <100> on the mode pins (M2, M1, M0). Table 10 shows the timing information for Figure 16.

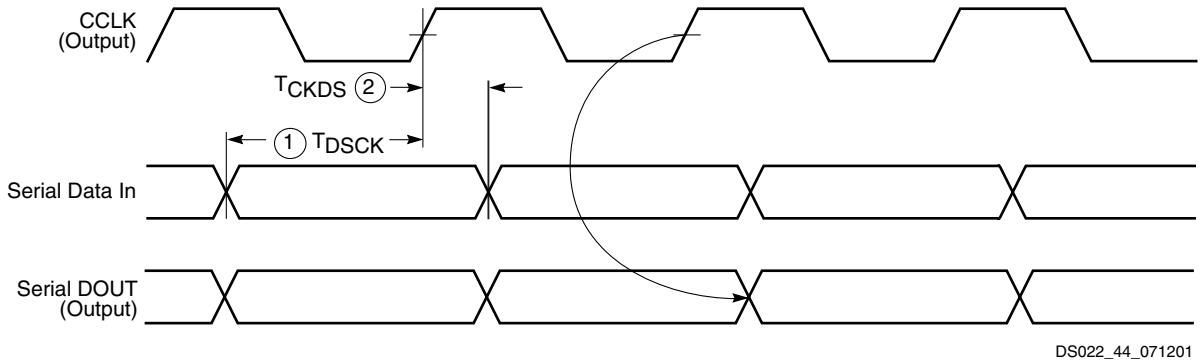

Figure 16: **Master-Serial Mode Programming Switching Characteristics**

At power-up, V_{CC} must rise from 1.0 V to V_{CC} Min in less than 50 ms, otherwise delay configuration by pulling $\overline{PROGRAM}$ Low until V_{CC} is valid.

SelectMAP Mode

The SelectMAP mode is the fastest configuration option. Byte-wide data is written into the FPGA with a BUSY flag controlling the flow of data.

An external data source provides a byte stream, CCLK, a Chip Select ($\overline{CS}$) signal and a Write signal ($\overline{WRITE}$). If BUSY is asserted (High) by the FPGA, the data must be held until BUSY goes Low.

Data can also be read using the SelectMAP mode. If $\overline{WRITE}$ is not asserted, configuration data is read out of the FPGA as part of a readback operation.

After configuration, the pins of the SelectMAP port can be used as additional user I/O. Alternatively, the port can be retained to permit high-speed 8-bit readback.

Retention of the SelectMAP port is selectable on a design-by-design basis when the bitstream is generated. If retention is selected, PROHIBIT constraints are required to prevent the SelectMAP-port pins from being used as user I/O.

Multiple Virtex-E FPGAs can be configured using the SelectMAP mode, and be made to start-up simultaneously. To configure multiple devices in this way, wire the individual CCLK, Data, $\overline{WRITE}$, and BUSY pins of all the devices in parallel. The individual devices are loaded separately by asserting the $\overline{CS}$ pin of each device in turn and writing the appropriate data. See Table 11 for SelectMAP Write Timing Characteristics.

Write

Write operations send packets of configuration data into the FPGA. The sequence of operations for a multi-cycle write operation is shown below. Note that a configuration packet can be split into many such sequences. The packet does not have to complete within one assertion of $\overline{CS}$, illustrated in Figure 17.

1. Assert $\overline{WRITE}$ and $\overline{CS}$ Low. Note that when $\overline{CS}$ is asserted on successive CCLKs, $\overline{WRITE}$ must remain either asserted or de-asserted. Otherwise, an abort is initiated, as described below.
2. Drive data onto D[7:0]. Note that to avoid contention, the data source should not be enabled while $\overline{CS}$ is Low and $\overline{WRITE}$ is High. Similarly, while $\overline{WRITE}$ is High, no more that one $\overline{CS}$ should be asserted.
3. At the rising edge of CCLK: If BUSY is Low, the data is accepted on this clock. If BUSY is High (from a previous write), the data is not accepted. Acceptance instead occurs on the first clock after BUSY goes Low, and the data must be held until this has happened.
4. Repeat steps 2 and 3 until all the data has been sent.
5. De-assert $\overline{CS}$ and $\overline{WRITE}$.

Table 11: **SelectMAP Write Timing Characteristics**

	Description		Symbol		Units
CCLK	D_{0-7} Setup/Hold	1/2	T_{SMDCC}/T_{SMCCD}	5.0 / 1.0	ns, min
	$\overline{CS}$ Setup/Hold	3/4	T_{SMCSCC}/T_{SMCCCS}	7.0 / 1.0	ns, min
	$\overline{WRITE}$ Setup/Hold	5/6	T_{SMCCW}/T_{SMWCC}	7.0 / 1.0	ns, min
	BUSY Propagation Delay	7	T_{SMCKBY}	12.0	ns, max
	Maximum Frequency		F_{CC}	66	MHz, max
	Maximum Frequency with no handshake		F_{CCNH}	50	MHz, max

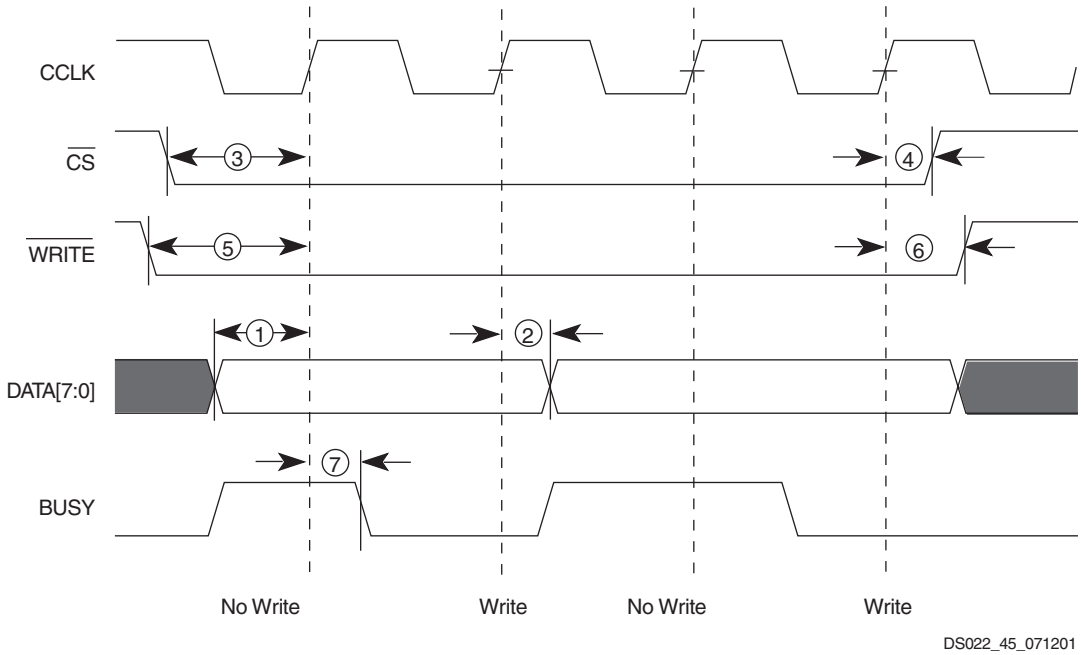

Figure 17: **Write Operations**

A flowchart for the write operation is shown in Figure 18. Note that if CCLK is slower than f_{CCNH}, the FPGA never asserts BUSY, In this case, the above handshake is unnecessary, and data can simply be entered into the FPGA every CCLK cycle.

Abort

During a given assertion of $\overline{CS}$, the user cannot switch from a write to a read, or vice-versa. This action causes the current packet command to be aborted. The device remains BUSY until the aborted operation has completed. Following an abort, data is assumed to be unaligned to word boundaries, and the FPGA requires a new synchronization word prior to accepting any new packets.

To initiate an abort during a write operation, de-assert $\overline{WRITE}$. At the rising edge of CCLK, an abort is initiated, as shown in Figure 19.

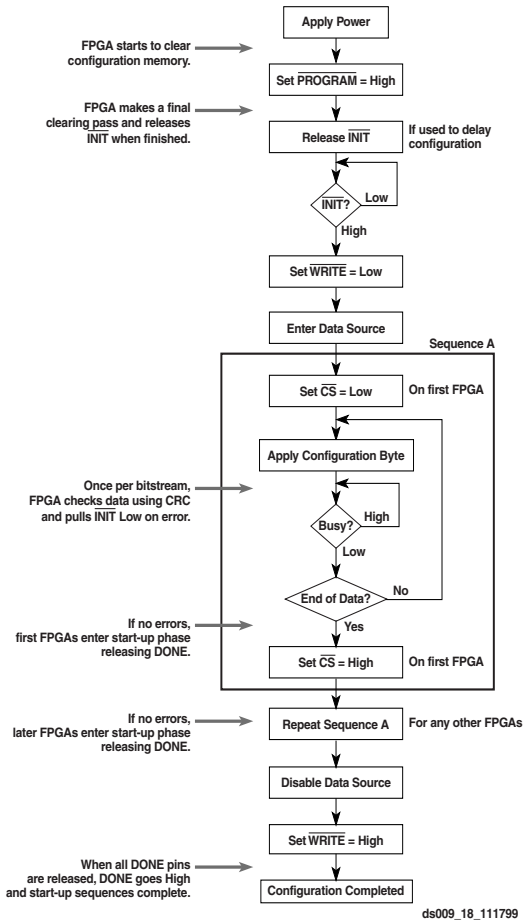

Figure 18: **SelectMAP Flowchart for Write Operations**

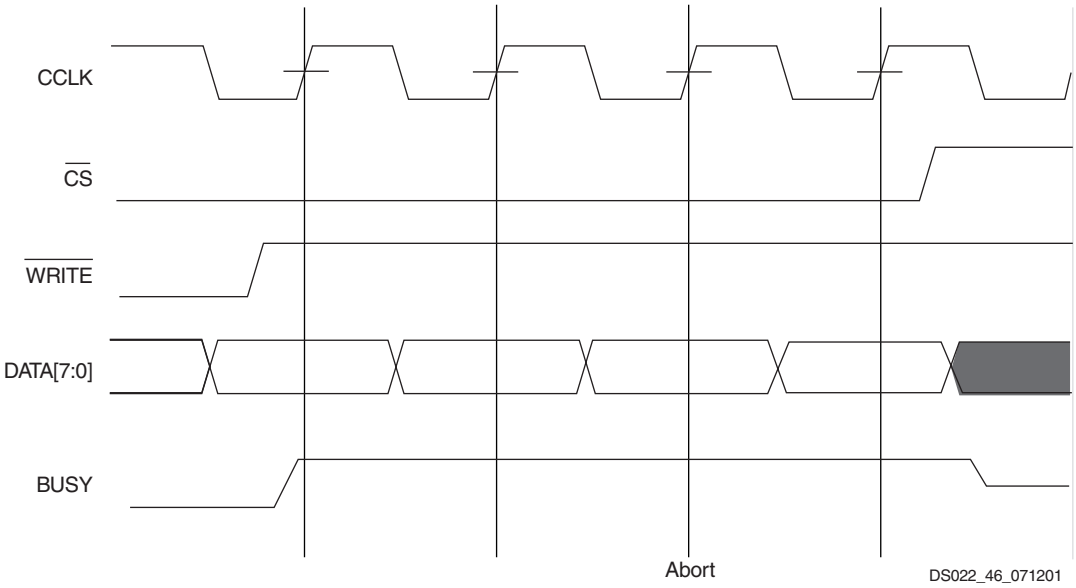

Figure 19: **SelectMAP Write Abort Waveforms**

Boundary-Scan Mode

In the boundary-scan mode, no non-dedicated pins are required, configuration being done entirely through the IEEE 1149.1 Test Access Port.

Configuration through the TAP uses the CFG_IN instruction. This instruction allows data input on TDI to be converted into data packets for the internal configuration bus.

The following steps are required to configure the FPGA through the boundary-scan port (when using TCK as a start-up clock).

1. Load the CFG_IN instruction into the boundary-scan instruction register (IR).
2. Enter the Shift-DR (SDR) state.
3. Shift a configuration bitstream into TDI.
4. Return to Run-Test-Idle (RTI).
5. Load the JSTART instruction into IR.
6. Enter the SDR state.
7. Clock TCK through the startup sequence.
8. Return to RTI.

Configuration and readback via the TAP is always available. The boundary-scan mode is selected by a <101> or <001> on the mode pins (M2, M1, M0).

Configuration Sequence

The configuration of Virtex-E devices is a three-phase process. First, the configuration memory is cleared. Next, configuration data is loaded into the memory, and finally, the logic is activated by a start-up process.

Configuration is automatically initiated on power-up unless it is delayed by the user, as described below. The configuration process can also be initiated by asserting $\overline{\text{PROGRAM}}$. The end of the memory-clearing phase is signalled by $\overline{\text{INIT}}$ going High, and the completion of the entire process is signalled by DONE going High.

The power-up timing of configuration signals is shown in Figure 20.

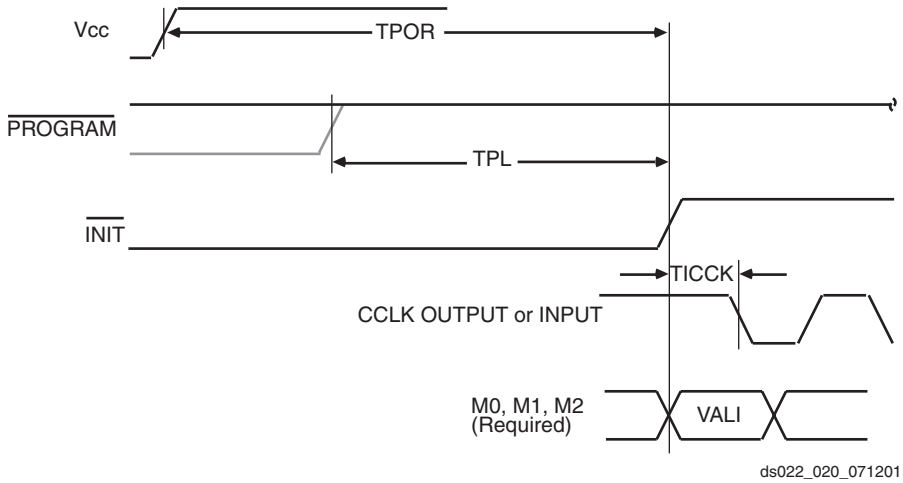

Figure 20: **Power-Up Timing Configuration Signals**

The corresponding timing characteristics are listed in Table 12.

Table 12: **Power-up Timing Characteristics**

Description	Symbol	Value	Units
Power-on Reset[1]	T_{POR}	2.0	ms, max
Program Latency	T_{PL}	100.0	µs, max
CCLK (output) Delay	T_{ICCK}	0.5	µs, min
		4.0	µs, max
Program Pulse Width	$T_{PROGRAM}$	300	ns, min

Notes:
1. T_{POR} delay is the initialization time required after V_{CCINT} and V_{CCO} in Bank 2 reach the recommended operating voltage.

Delaying Configuration

$\overline{\text{INIT}}$ can be held Low using an open-drain driver. An open-drain is required since $\overline{\text{INIT}}$ is a bidirectional open-drain pin that is held Low by the FPGA while the configuration memory is being cleared. Extending the time that the pin is Low causes the configuration sequencer to wait. Thus, configuration is delayed by preventing entry into the phase where data is loaded.

Start-Up Sequence

The default Start-up sequence is that one CCLK cycle after DONE goes High, the global 3-state signal (GTS) is released. This permits device outputs to turn on as necessary.

One CCLK cycle later, the Global Set/Reset (GSR) and Global Write Enable (GWE) signals are released. This permits the internal storage elements to begin changing state in response to the logic and the user clock.

The relative timing of these events can be changed. In addition, the GTS, GSR, and GWE events can be made dependent on the DONE pins of multiple devices all going High, forcing the devices to start synchronously. The sequence can also be paused at any stage until lock has been achieved on any or all DLLs.

Readback

The configuration data stored in the Virtex-E configuration memory can be readback for verification. Along with the configuration data it is possible to readback the contents all flip-flops/latches, LUT RAMs, and block RAMs. This capability is used for real-time debugging. For more detailed information, see application note XAPP138 “Virtex FPGA Series Configuration and Readback”.

Design Considerations

This section contains more detailed design information on the following features.

- Delay-Locked Loop . . . see page 19
- BlockRAM . . . see page 23
- SelectI/O . . . see page 30

Using DLLs

The Virtex-E FPGA series provides up to eight fully digital dedicated on-chip Delay-Locked Loop (DLL) circuits which provide zero propagation delay, low clock skew between output clock signals distributed throughout the device, and advanced clock domain control. These dedicated DLLs can be used to implement several circuits which improve and simplify system level design.

Introduction

As FPGAs grow in size, quality on-chip clock distribution becomes increasingly important. Clock skew and clock delay impact device performance and the task of managing clock skew and clock delay with conventional clock trees becomes more difficult in large devices. The Virtex-E series of devices resolve this potential problem by providing up to eight fully digital dedicated on-chip DLL circuits, which provide zero propagation delay and low clock skew between output clock signals distributed throughout the device.

Each DLL can drive up to two global clock routing networks within the device. The global clock distribution network minimizes clock skews due to loading differences. By monitoring a sample of the DLL output clock, the DLL can compensate for the delay on the routing network, effectively eliminating the delay from the external input port to the individual clock loads within the device.

In addition to providing zero delay with respect to a user source clock, the DLL can provide multiple phases of the source clock. The DLL can also act as a clock doubler or it can divide the user source clock by up to 16.

Clock multiplication gives the designer a number of design alternatives. For instance, a 50 MHz source clock doubled by the DLL can drive an FPGA design operating at 100 MHz. This technique can simplify board design because the clock path on the board no longer distributes such a high-speed signal. A multiplied clock also provides designers the option of time-domain-multiplexing, using one circuit twice per clock cycle, consuming less area than two copies of the same circuit. Two DLLs in can be connected in series to increase the effective clock multiplication factor to four.

The DLL can also act as a clock mirror. By driving the DLL output off-chip and then back in again, the DLL can be used to de-skew a board level clock between multiple devices.

In order to guarantee the system clock establishes prior to the device “waking up,” the DLL can delay the completion of the device configuration process until after the DLL achieves lock.

By taking advantage of the DLL to remove on-chip clock delay, the designer can greatly simplify and improve system level design involving high-fanout, high-performance clocks.

Library DLL Symbols

Figure 21 shows the simplified Xilinx library DLL macro symbol, BUFGDLL. This macro delivers a quick and efficient way to provide a system clock with zero propagation delay throughout the device. Figure 22 and Figure 23 show the two library DLL primitives. These symbols provide access to the complete set of DLL features when implementing more complex applications.

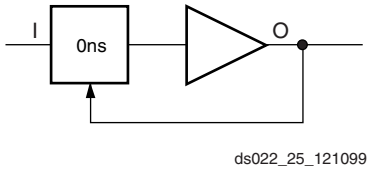

Figure 21: **Simplified DLL Macro Symbol BUFGDLL**

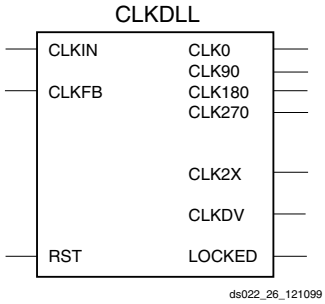

Figure 22: **Standard DLL Symbol CLKDLL**

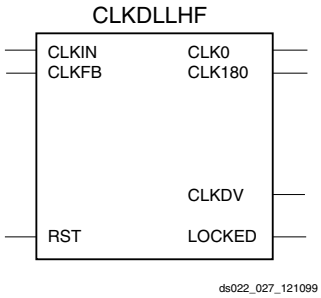

Figure 23: **High Frequency DLL Symbol CLKDLLHF**

BUFGDLL Pin Descriptions

Use the BUFGDLL macro as the simplest way to provide zero propagation delay for a high-fanout on-chip clock from an external input. This macro uses the IBUFG, CLKDLL and BUFG primitives to implement the most basic DLL application as shown in Figure 24.

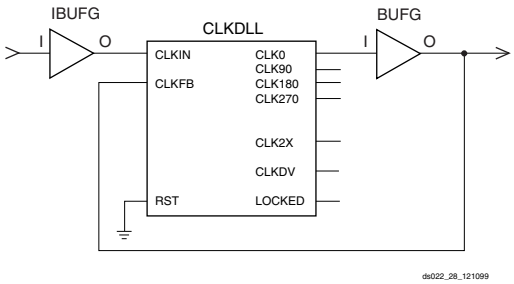

Figure 24: **BUFGDLL Schematic**

This symbol does not provide access to the advanced clock domain controls or to the clock multiplication or clock division features of the DLL. This symbol also does not provide access to the RST, or LOCKED pins of the DLL. For access to these features, a designer must use the library DLL primitives described in the following sections.

Source Clock Input — I

The I pin provides the user source clock, the clock signal on which the DLL operates, to the BUFGDLL. For the BUFGDLL macro the source clock frequency must fall in the low frequency range as specified in the data sheet. The BUFGDLL requires an external signal source clock. Therefore, only an external input port can source the signal that drives the BUFGDLL I pin.

Clock Output — O

The clock output pin O represents a delay-compensated version of the source clock (I) signal. This signal, sourced by a global clock buffer BUFG symbol, takes advantage of the dedicated global clock routing resources of the device.

The output clock has a 50-50 duty cycle unless you deactivate the duty cycle correction property.

CLKDLL Primitive Pin Descriptions

The library CLKDLL primitives provide access to the complete set of DLL features needed when implementing more complex applications with the DLL.

Source Clock Input — CLKIN

The CLKIN pin provides the user source clock (the clock signal on which the DLL operates) to the DLL. The CLKIN frequency must fall in the ranges specified in the data sheet. A global clock buffer (BUFG) driven from another CLKDLL, one of the global clock input buffers (IBUFG), or an IO_LVDS_DLL pin on the same edge of the device (top or bottom) must source this clock signal. There are four IO_LVDS_DLL input pins that can be used as inputs to the DLLs. This makes a total of eight usable input pins for DLLs in the Virtex-E family.

Feedback Clock Input — CLKFB

The DLL requires a reference or feedback signal to provide the delay-compensated output. Connect only the CLK0 or CLK2X DLL outputs to the feedback clock input (CLKFB) pin to provide the necessary feedback to the DLL. The feedback clock input can also be provided through one of the following pins.

IBUFG - Global Clock Input Pad

IO_LVDS_DLL - the pin adjacent to IBUF

If an IBUFG sources the CLKFB pin, the following special rules apply.

1. An external input port must source the signal that drives the IBUFG I pin.
2. The CLK2X output must feedback to the device if both the CLK0 and CLK2X outputs are driving off chip devices.
3. That signal must directly drive only OBUFs and nothing else.

These rules enable the software determine which DLL clock output sources the CLKFB pin.

Reset Input — RST

When the reset pin RST activates the LOCKED signal deactivates within four source clock cycles. The RST pin, active High, must either connect to a dynamic signal or tied to ground. As the DLL delay taps reset to zero, glitches can occur on the DLL clock output pins. Activation of the RST pin can also severely affect the duty cycle of the clock output pins. Furthermore, the DLL output clocks no longer de-skew with respect to one another. For these reasons, rarely use the reset pin unless re-configuring the device or changing the input frequency.

2x Clock Output — CLK2X

The output pin CLK2X provides a frequency-doubled clock with an automatic 50/50 duty-cycle correction. Until the CLKDLL has achieved lock, the CLK2X output appears as a 1x version of the input clock with a 25/75 duty cycle. This behavior allows the DLL to lock on the correct edge with respect to source clock. This pin is not available on the CLKDLLHF primitive.

Clock Divide Output — CLKDV

The clock divide output pin CLKDV provides a lower frequency version of the source clock. The CLKDV_DIVIDE property controls CLKDV such that the source clock is divided by N where N is either 1.5, 2, 2.5, 3, 4, 5, 8, or 16.

This feature provides automatic duty cycle correction such that the CLKDV output pin always has a 50/50 duty cycle, with the exception of noninteger divides in HF mode, where the duty cycle is 1/3 for N=1.5 and 2/5 for N=2.5.

1x Clock Outputs — CLK[0/90/180/270]

The 1x clock output pin CLK0 represents a delay-compensated version of the source clock (CLKIN) signal. The CLKDLL primitive provides three phase-shifted versions of the CLK0 signal while CLKDLLHF provides only the 180 phase-shifted version. The relationship between phase shift and the corresponding period shift appears in Table 13.

Table 13: **Relationship of Phase-Shifted Output Clock to Period Shift**

Phase (degrees)	Period Shift (percent)
0	0%
90	25%
180	50%
270	75%

The timing diagrams in Figure 25 illustrate the DLL clock output characteristics.

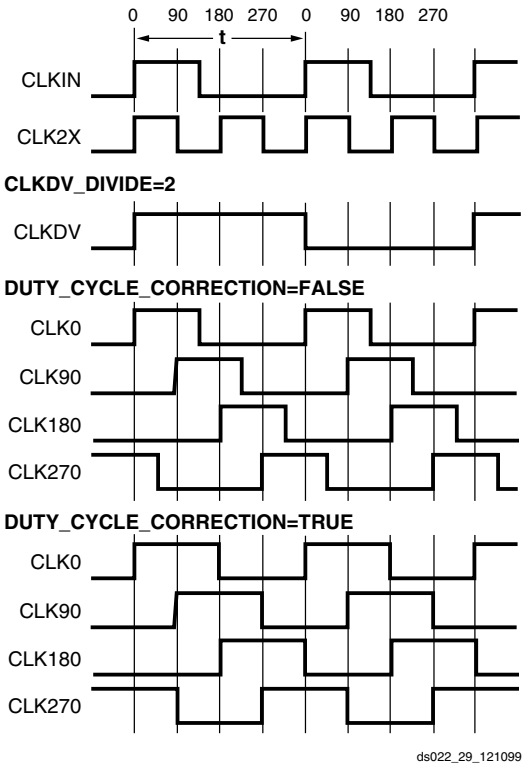

Figure 25: **DLL Output Characteristics**

The DLL provides duty cycle correction on all 1x clock outputs such that all 1x clock outputs by default have a 50/50 duty cycle. The DUTY_CYCLE_CORRECTION property (TRUE by default), controls this feature. In order to deactivate the DLL duty cycle correction, attach the DUTY_CYCLE_CORRECTION=FALSE property to the DLL symbol. When duty cycle correction deactivates, the output clock has the same duty cycle as the source clock.

The DLL clock outputs can drive an OBUF, a BUFG, or they can route directly to destination clock pins. The DLL clock outputs can only drive the BUFGs that reside on the same edge (top or bottom).

Locked Output — LOCKED

To achieve lock, the DLL might need to sample several thousand clock cycles. After the DLL achieves lock, the LOCKED signal activates. The DLL timing parameter section of the data sheet provides estimates for locking times.

To guarantee that the system clock is established prior to the device "waking up," the DLL can delay the completion of the device configuration process until after the DLL locks. The STARTUP_WAIT property activates this feature.

Until the LOCKED signal activates, the DLL output clocks are not valid and can exhibit glitches, spikes, or other spurious movement. In particular the CLK2X output appears as a 1x clock with a 25/75 duty cycle.

DLL Properties

Properties provide access to some of the Virtex-E series DLL features, (for example, clock division and duty cycle correction).

Duty Cycle Correction Property

The 1x clock outputs, CLK0, CLK90, CLK180, and CLK270, use the duty-cycle corrected default, exhibiting a 50/50 duty cycle. The DUTY_CYCLE_CORRECTION property (by default TRUE) controls this feature. To deactivate the DLL duty-cycle correction for the 1x clock outputs, attach the DUTY_CYCLE_CORRECTION=FALSE property to the DLL symbol. When duty-cycle correction deactivates, the output clock has the same duty cycle as the source clock.

Clock Divide Property

The CLKDV_DIVIDE property specifies how the signal on the CLKDV pin is frequency divided with respect to the CLK0 pin. The values allowed for this property are 1.5, 2, 2.5, 3, 4, 5, 8, or 16; the default value is 2.

Startup Delay Property

This property, STARTUP_WAIT, takes on a value of TRUE or FALSE (the default value). When TRUE the device configuration DONE signal waits until the DLL locks before going to High.

Virtex-E DLL Location Constraints

As shown in Figure 26, there are four additional DLLs in the Virtex-E devices, for a total of eight per Virtex-E device. These DLLs are located in silicon, at the top and bottom of the two innermost block SelectRAM columns. The location constraint LOC, attached to the DLL symbol with the identifier DLL0S, DLL0P, DLL1S, DLL1P, DLL2S, DLL2P, DLL3S, or DLL3P, controls the DLL location.

The LOC property uses the following form:

LOC = DLL0P

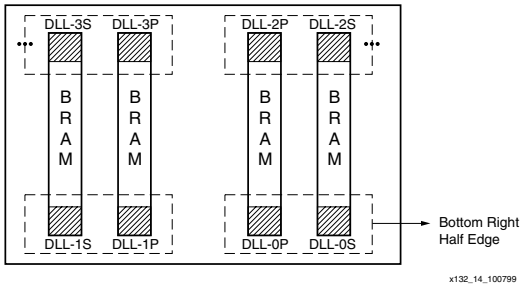

Figure 26: **Virtex Series DLLs**

Design Factors

Use the following design considerations to avoid pitfalls and improve success designing with Xilinx devices.

Input Clock

The output clock signal of a DLL, essentially a delayed version of the input clock signal, reflects any instability on the input clock in the output waveform. For this reason the quality of the DLL input clock relates directly to the quality of the output clock waveforms generated by the DLL. The DLL input clock requirements are specified in the data sheet.

In most systems a crystal oscillator generates the system clock. The DLL can be used with any commercially available quartz crystal oscillator. For example, most crystal oscillators produce an output waveform with a frequency tolerance of 100 PPM, meaning 0.01 percent change in the clock period. The DLL operates reliably on an input waveform with a frequency drift of up to 1 ns — orders of magnitude in excess of that needed to support any crystal oscillator in the industry. However, the cycle-to-cycle jitter must be kept to less than 300 ps in the low frequencies and 150 ps for the high frequencies.

Input Clock Changes

Changing the period of the input clock beyond the maximum drift amount requires a manual reset of the CLKDLL. Failure to reset the DLL produces an unreliable lock signal and output clock.

It is possible to stop the input clock with little impact to the DLL. Stopping the clock should be limited to less than 100 µs to keep device cooling to a minimum. The clock should be stopped during a Low phase, and when restored the full High period should be seen. During this time, LOCKED stays High and remains High when the clock is restored.

When the clock is stopped, one to four more clocks are still observed as the delay line is flushed. When the clock is restarted, the output clocks are not observed for one to four clocks as the delay line is filled. The most common case is two or three clocks.

In a similar manner, a phase shift of the input clock is also possible. The phase shift propagates to the output one to four clocks after the original shift, with no disruption to the CLKDLL control.

Output Clocks

As mentioned earlier in the DLL pin descriptions, some restrictions apply regarding the connectivity of the output pins. The DLL clock outputs can drive an OBUF, a global clock buffer BUFG, or they can route directly to destination clock pins. The only BUFGs that the DLL clock outputs can drive are the two on the same edge of the device (top or bottom). In addition, the CLK2X output of the secondary DLL can connect directly to the CLKIN of the primary DLL in the same quadrant.

Do not use the DLL output clock signals until after activation of the LOCKED signal. Prior to the activation of the LOCKED signal, the DLL output clocks are not valid and can exhibit glitches, spikes, or other spurious movement.

Useful Application Examples

The Virtex-E DLL can be used in a variety of creative and useful applications. The following examples show some of the more common applications. The Verilog and VHDL example files are available at:

ftp://ftp.xilinx.com/pub/applications/xapp/xapp132.zip

Standard Usage

The circuit shown in Figure 27 resembles the BUFGDLL macro implemented to provide access to the RST and LOCKED pins of the CLKDLL.

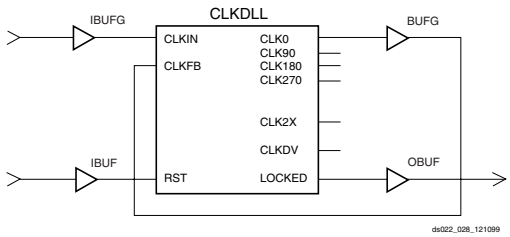

Figure 27: **Standard DLL Implementation**

Board Level De-skew of Multiple Non-Virtex-E Devices

The circuit shown in Figure 28 can be used to de-skew a system clock between a Virtex-E chip and other non-Virtex-E chips on the same board. This application is commonly used when the Virtex-E device is used in conjunction with other standard products such as SRAM or DRAM devices. While designing the board level route, ensure that the return net delay to the source equals the delay to the other chips involved.

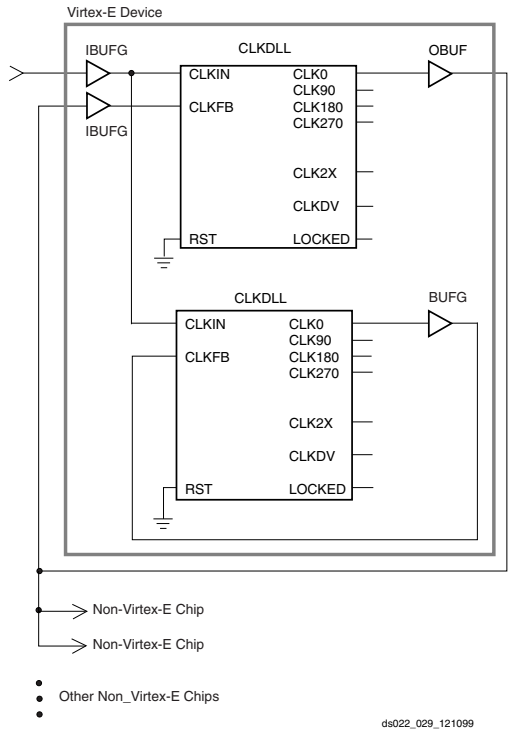

Figure 28: **DLL De-skew of Board Level Clock**

Board-level de-skew is not required for low-fanout clock networks. It is recommended for systems that have fanout limitations on the clock network, or if the clock distribution chip cannot handle the load.

Do not use the DLL output clock signals until after activation of the LOCKED signal. Prior to the activation of the LOCKED signal, the DLL output clocks are not valid and can exhibit glitches, spikes, or other spurious movement.

The dll_mirror_1 files in the **xapp132.zip** file show the VHDL and Verilog implementation of this circuit.

De-Skew of Clock and Its 2x Multiple

The circuit shown in Figure 29 implements a 2x clock multiplier and also uses the CLK0 clock output with a zero ns skew between registers on the same chip. Alternatively, a clock divider circuit can be implemented using similar connections.

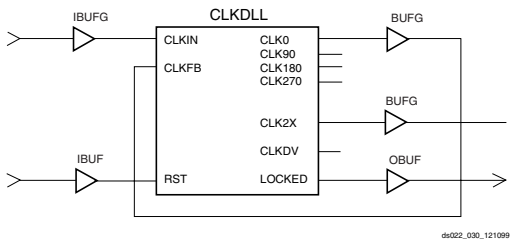

Figure 29: **DLL De-skew of Clock and 2x Multiple**

Because any single DLL can access only two BUFGs at most, any additional output clock signals must be routed from the DLL in this example on the high speed backbone routing.

The dll_2x files in the **xapp132.zip** file show the VHDL and Verilog implementation of this circuit.

Virtex-E 4x Clock

Two DLLs located in the same half-edge (top-left, top-right, bottom-right, bottom-left) can be connected together, without using a BUFG between the CLKDLLs, to generate a 4x clock as shown in Figure 30. Virtex-E devices, like the Virtex devices, have four clock networks that are available for internal de-skewing of the clock. Each of the eight DLLs have access to two of the four clock networks. Although all the DLLs can be used for internal de-skewing, the presence of two GCLKBUFs on the top and two on the bottom indicate that only two of the four DLLs on the top (and two of the four DLLs on the bottom) can be used for this purpose.

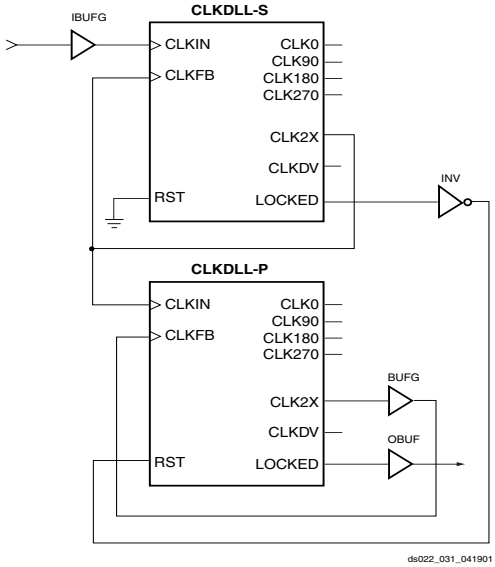

Figure 30: **DLL Generation of 4x Clock in Virtex-E Devices**

The dll_4xe files in the xapp132.zip file show the DLL implementation in Verilog for Virtex-E devices. These files can be found at:

ftp://ftp.xilinx.com/pub/applications/xapp/xapp132.zip

Using Block SelectRAM+ Features

The Virtex FPGA Series provides dedicated blocks of on-chip, true dual-read/write port synchronous RAM, with 4096 memory cells. Each port of the block SelectRAM+ memory can be independently configured as a read/write port, a read port, a write port, and can be configured to a specific data width. The block SelectRAM+ memory offers new capabilities allowing the FPGA designer to simplify designs.

Operating Modes

VIrtex-E block SelectRAM+ memory supports two operating modes:

- Read Through
- Write Back

Read Through (one clock edge)

The read address is registered on the read port clock edge and data appears on the output after the RAM access time. Some memories might place the latch/register at the outputs, depending on whether a faster clock-to-out versus set-up time is desired. This is generally considered to be an inferior solution, since it changes the read operation to an asynchronous function with the possibility of missing an address/control line transition during the generation of the read pulse clock.

Write Back (one clock edge)

The write address is registered on the write port clock edge and the data input is written to the memory and mirrored on the output.

Block SelectRAM+ Characteristics

- All inputs are registered with the port clock and have a set-up to clock timing specification.
- All outputs have a read through or write back function depending on the state of the port WE pin. The outputs relative to the port clock are available after the clock-to-out timing specification.
- The block SelectRAMs are true SRAM memories and do not have a combinatorial path from the address to the output. The LUT SelectRAM+ cells in the CLBs are still available with this function.
- The ports are completely independent from each other (*i.e.,* clocking, control, address, read/write function, and data width) without arbitration.
- A write operation requires only one clock edge.
- A read operation requires only one clock edge.

The output ports are latched with a self timed circuit to guarantee a glitch free read. The state of the output port does not change until the port executes another read or write operation.

Library Primitives

Figure 31 and Figure 32 show the two generic library block SelectRAM+ primitives. Table 14 describes all of the available primitives for synthesis and simulation.

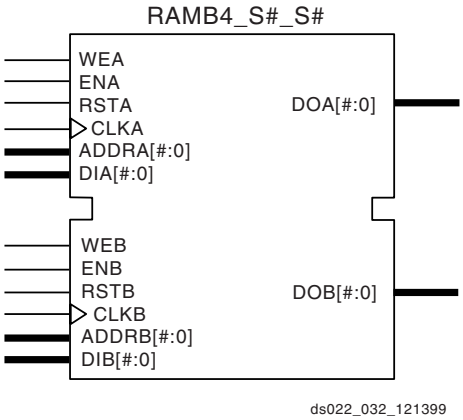

Figure 31: **Dual-Port Block SelectRAM+ Memory**

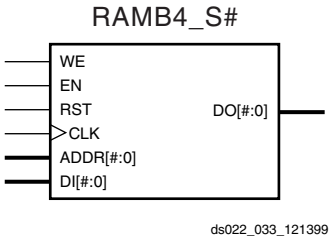

Figure 32: **Single-Port Block SelectRAM+ Memory**

Table 14: **Available Library Primitives**

Primitive	Port A Width	Port B Width
RAMB4_S1	1	N/A
RAMB4_S1_S1		1
RAMB4_S1_S2		2
RAMB4_S1_S4		4
RAMB4_S1_S8		8
RAMB4_S1_S16		16
RAMB4_S2	2	N/A
RAMB4_S2_S2		2
RAMB4_S2_S4		4
RAMB4_S2_S8		8
RAMB4_S2_S16		16
RAMB4_S4	4	N/A
RAMB4_S4_S4		4
RAMB4_S4_S8		8
RAMB4_S4_S16		16
RAMB4_S8	8	N/A
RAMB4_S8_S8		8
RAMB4_S8_S16		16
RAMB4_S16	16	N/A
RAMB4_S16_S16		16

Port Signals

Each block SelectRAM+ port operates independently of the others while accessing the same set of 4096 memory cells.

Table 15 describes the depth and width aspect ratios for the block SelectRAM+ memory.

Table 15: **Block SelectRAM+ Port Aspect Ratios**

Width	Depth	ADDR Bus	Data Bus
1	4096	ADDR<11:0>	DATA<0>
2	2048	ADDR<10:0>	DATA<1:0>
4	1024	ADDR<9:0>	DATA<3:0>
8	512	ADDR<8:0>	DATA<7:0>
16	256	ADDR<7:0>	DATA<15:0>

Clock—CLK[A/B]

Each port is fully synchronous with independent clock pins. All port input pins have setup time referenced to the port CLK pin. The data output bus has a clock-to-out time referenced to the CLK pin.

Enable—EN[A/B]

The enable pin affects the read, write and reset functionality of the port. Ports with an inactive enable pin keep the output pins in the previous state and do not write data to the memory cells.

Write Enable—WE[A/B]

Activating the write enable pin allows the port to write to the memory cells. When active, the contents of the data input bus are written to the RAM at the address pointed to by the address bus, and the new data also reflects on the data out bus. When inactive, a read operation occurs and the contents of the memory cells referenced by the address bus reflect on the data out bus.

Reset—RST[A/B]

The reset pin forces the data output bus latches to zero synchronously. This does not affect the memory cells of the RAM and does not disturb a write operation on the other port.

Address Bus—ADDR[A/B]<#:0>

The address bus selects the memory cells for read or write. The width of the port determines the required width of this bus as shown in Table 15.

Data In Bus—DI[A/B]<#:0>

The data in bus provides the new data value to be written into the RAM. This bus and the port have the same width, as shown in Table 15.

Data Output Bus—DO[A/B]<#:0>

The data out bus reflects the contents of the memory cells referenced by the address bus at the last active clock edge. During a write operation, the data out bus reflects the data in bus. The width of this bus equals the width of the port. The allowed widths appear in Table 15.

Inverting Control Pins

The four control pins (CLK, EN, WE and RST) for each port have independent inversion control as a configuration option.

Address Mapping

Each port accesses the same set of 4096 memory cells using an addressing scheme dependent on the width of the port.

The physical RAM location addressed for a particular width are described in the following formula (of interest only when the two ports use different aspect ratios).

$$\text{Start} = ((\text{ADDR}_{port} + 1) * \text{Width}_{port}) - 1$$

$$\text{End} = \text{ADDR}_{port} * \text{Width}_{port}$$

Table 16 shows low order address mapping for each port width.

Table 16: **Port Address Mapping**

Port Width	Port Addresses																	
1	4095...	15	14	13	12	11	10	09	08	07	06	05	04	03	02	01	00
2	2047...	07		06		05		04		03		02		01		00	
4	1023...	03				02				01				00			
8	511...	01								00							
16	255...	00															

Creating Larger RAM Structures

The block SelectRAM+ columns have specialized routing to allow cascading blocks together with minimal routing delays. This achieves wider or deeper RAM structures with a smaller timing penalty than when using normal routing channels.

Location Constraints

Block SelectRAM+ instances can have LOC properties attached to them to constrain the placement. The block SelectRAM+ placement locations are separate from the CLB location naming convention, allowing the LOC properties to transfer easily from array to array.

The LOC properties use the following form.

LOC = RAMB4_R#C#

RAMB4_R0C0 is the upper left RAMB4 location on the device.

Conflict Resolution

The block SelectRAM+ memory is a true dual-read/write port RAM that allows simultaneous access of the same memory cell from both ports. When one port writes to a given memory cell, the other port must not address that memory cell (for a write or a read) within the clock-to-clock setup window. The following lists specifics of port and memory cell write conflict resolution.

- If both ports write to the same memory cell simultaneously, violating the clock-to-clock setup requirement, consider the data stored as invalid.
- If one port attempts a read of the same memory cell the other simultaneously writes, violating the clock-to-clock setup requirement, the following occurs.
  - The write succeeds
  - The data out on the writing port accurately reflects the data written.
  - The data out on the reading port is invalid.

Conflicts do not cause any physical damage.

Single Port Timing

Figure 33 shows a timing diagram for a single port of a block SelectRAM+ memory. The block SelectRAM+ AC switching characteristics are specified in the data sheet. The block SelectRAM+ memory is initially disabled.

At the first rising edge of the CLK pin, the ADDR, DI, EN, WE, and RST pins are sampled. The EN pin is High and the WE pin is Low indicating a read operation. The DO bus contains the contents of the memory location, 0x00, as indicated by the ADDR bus.

At the second rising edge of the CLK pin, the ADDR, DI, EN, WR, and RST pins are sampled again. The EN and WE pins are High indicating a write operation. The DO bus mirrors the DI bus. The DI bus is written to the memory location 0x0F.

At the third rising edge of the CLK pin, the ADDR, DI, EN, WR, and RST pins are sampled again. The EN pin is High and the WE pin is Low indicating a read operation. The DO bus contains the contents of the memory location 0x7E as indicated by the ADDR bus.

At the fourth rising edge of the CLK pin, the ADDR, DI, EN, WR, and RST pins are sampled again. The EN pin is Low indicating that the block SelectRAM+ memory is now disabled. The DO bus retains the last value.

Dual Port Timing

Figure 34 shows a timing diagram for a true dual-port read/write block SelectRAM+ memory. The clock on port A has a longer period than the clock on Port B. The timing parameter T_{BCCS}, (clock-to-clock set-up) is shown on this diagram. The parameter, T_{BCCS} is violated once in the diagram. All other timing parameters are identical to the single port version shown in Figure 33.

T_{BCCS} is only of importance when the address of both ports are the same and at least one port is performing a write operation. When the clock-to-clock set-up parameter is violated for a WRITE-WRITE condition, the contents of the memory at that location are invalid. When the clock-to-clock set-up parameter is violated for a WRITE-READ condition, the contents of the memory are correct, but the read port has invalid data.

At the first rising edge of the CLKA, memory location 0x00 is to be written with the value 0xAAAA and is mirrored on the DOA bus. The last operation of Port B was a read to the same memory location 0x00. The DOB bus of Port B does not change with the new value on Port A, and retains the last read value. A short time later, Port B executes another read to memory location 0x00, and the DOB bus now reflects the new memory value written by Port A.

At the second rising edge of CLKA, memory location 0x7E is written with the value 0x9999 and is mirrored on the DOA bus. Port B then executes a read operation to the same memory location without violating the T_{BCCS} parameter and the DOB reflects the new memory values written by Port A.

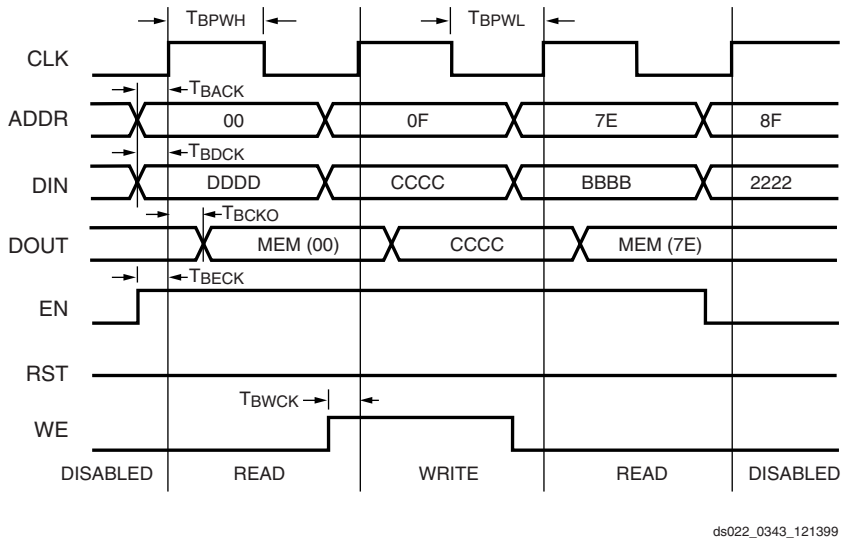

Figure 33: **Timing Diagram for Single Port Block SelectRAM+ Memory**

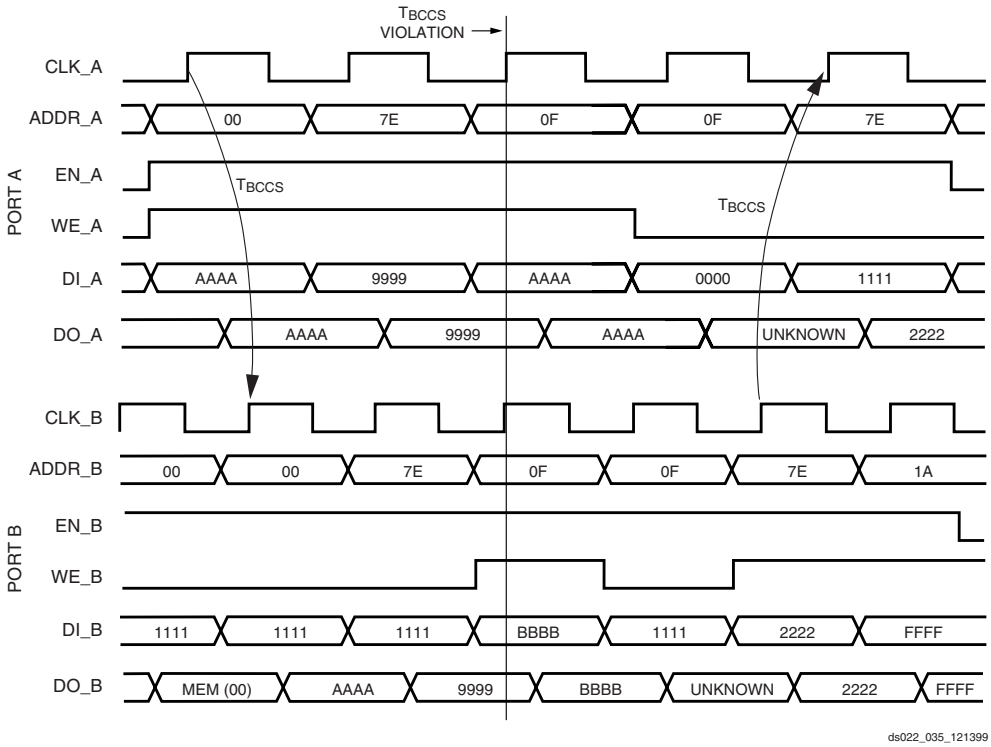

Figure 34: **Timing Diagram for a True Dual-port Read/Write Block SelectRAM+ Memory**

At the third rising edge of CLKA, the T_{BCCS} parameter is violated with two writes to memory location 0x0F. The DOA and DOB busses reflect the contents of the DIA and DIB busses, but the stored value at 0x0F is invalid.

At the fourth rising edge of CLKA, a read operation is performed at memory location 0x0F and invalid data is present on the DOA bus. Port B also executes a read operation to memory location 0x0F and also reads invalid data.

At the fifth rising edge of CLKA a read operation is performed that does not violate the T_{BCCS} parameter to the previous write of 0x7E by Port B. THe DOA bus reflects the recently written value by Port B.

Initialization

The block SelectRAM+ memory can initialize during the device configuration sequence. The 16 initialization properties of 64 hex values each (a total of 4096 bits) set the initialization of each RAM. These properties appear in Table 17. Any initialization properties not explicitly set configure as zeros. Partial initialization strings pad with zeros. Initialization strings greater than 64 hex values generate an error. The RAMs can be simulated with the initialization values using generics in VHDL simulators and parameters in Verilog simulators.

Initialization in VHDL and Synopsys

The block SelectRAM+ structures can be initialized in VHDL for both simulation and synthesis for inclusion in the EDIF output file. The simulation of the VHDL code uses a generic to pass the initialization. Synopsys FPGA compiler does not presently support generics. The initialization values instead attach as attributes to the RAM by a built-in Synopsys dc_script. The translate_off statement stops synthesis translation of the generic statements. The following code illustrates a module that employs these techniques.

Table 17: **RAM Initialization Properties**

Property	Memory Cells
INIT_00	255 to 0
INIT_01	511 to 256
INIT_02	767 to 512
INIT_03	1023 to 768
INIT_04	1279 to 1024
INIT_05	1535 to 1280
INIT_06	1791 to 2047
INIT_07	2047 to 1792
INIT_08	2303 to 2048
INIT_09	2559 to 2304
INIT_0a	2815 to 2560
INIT_0b	3071 to 2816
INIT_0c	3327 to 3072
INIT_0d	3583 to 3328
INIT_0e	3839 to 3584
INIT_0f	4095 to 3840

Initialization in Verilog and Synopsys

The block SelectRAM+ structures can be initialized in Verilog for both simulation and synthesis for inclusion in the EDIF output file. The simulation of the Verilog code uses a defparam to pass the initialization. The Synopsys FPGA compiler does not presently support defparam. The initialization values instead attach as attributes to the RAM by a built-in Synopsys dc_script. The translate_off statement stops synthesis translation of the defparam statements. The following code illustrates a module that employs these techniques.

Design Examples

Creating a 32-bit Single-Port RAM

The true dual-read/write port functionality of the block SelectRAM+ memory allows a single port, 128 deep by 32-bit wide RAM to be created using a single block SelectRAM+ cell as shown in Figure 35.

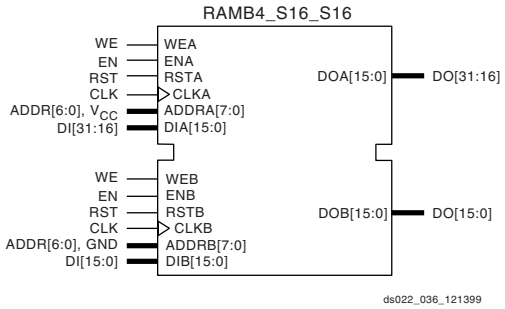

Figure 35: **Single Port 128 x 32 RAM**

Interleaving the memory space, setting the LSB of the address bus of Port A to 1 (V_{CC}), and the LSB of the address bus of Port B to 0 (GND), allows a 32-bit wide single port RAM to be created.

Creating Two Single-Port RAMs

The true dual-read/write port functionality of the block SelectRAM+ memory allows a single RAM to be split into two single port memories of 2K bits each as shown in Figure 36.

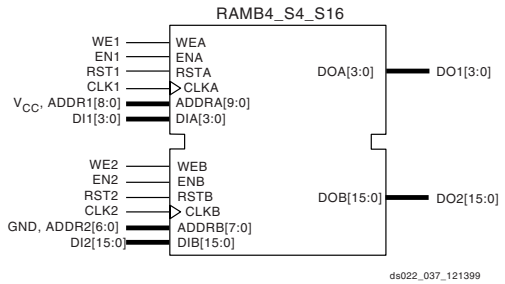

Figure 36: **512 x 4 RAM and 128 x 16 RAM**

In this example, a 512K x 4 RAM (Port A) and a 128 x 16 RAM (Port B) are created out of a single block SelectRAM+. The address space for the RAM is split by fixing the MSB of Port A to 1 (V_{CC}) for the upper 2K bits and the MSB of Port B to 0 (GND) for the lower 2K bits.

Block Memory Generation

The CoreGen program generates memory structures using the block SelectRAM+ features. This program outputs VHDL or Verilog simulation code templates and an EDIF file for inclusion in a design.

VHDL Initialization Example

```
library IEEE;
use IEEE.std_logic_1164.all;

entity MYMEM is
port (CLK, WE:in std_logic;
ADDR: in std_logic_vector(8 downto 0);
DIN: in std_logic_vector(7 downto 0);
DOUT: out std_logic_vector(7 downto 0));
end MYMEM;

architecture BEHAVE of MYMEM is
signal logic0, logic1: std_logic;

component RAMB4_S8
--synopsys translate_off
generic( INIT_00,INIT_01, INIT_02, INIT_03, INIT_04, INIT_05, INIT_06, INIT_07,
INIT_08, INIT_09, INIT_0a, INIT_0b, INIT_0c, INIT_0d, INIT_0e, INIT_0f : BIT_VECTOR(255
downto 0)
:= X"0000000000000000000000000000000000000000000000000000000000000000");
--synopsys translate_on
port (WE, EN, RST, CLK: in STD_LOGIC;
ADDR: in STD_LOGIC_VECTOR(8 downto 0);
DI: in STD_LOGIC_VECTOR(7 downto 0);
DO: out STD_LOGIC_VECTOR(7 downto 0));
end component;

--synopsys dc_script_begin
--set_attribute ram0 INIT_00
"0123456789ABCDEF0123456789ABCDEF0123456789ABCDEF0123456789ABCDEF" -type string
--set_attribute ram0 INIT_01
"FEDCBA9876543210FEDCBA9876543210FEDCBA9876543210FEDCBA9876543210" -type string
--synopsys dc_script_end

begin
logic0 <='0';
logic1 <='1';

ram0: RAMB4_S8
--synopsys translate_off
generic map (

INIT_00 => X"0123456789ABCDEF0123456789ABCDEF0123456789ABCDEF0123456789ABCDEF",
INIT_01 => X"FEDCBA9876543210FEDCBA9876543210FEDCBA9876543210FEDCBA9876543210")
--synopsys translate_on
port map (WE=>WE, EN=>logic1, RST=>logic0, CLK=>CLK,ADDR=>ADDR, DI=>DIN, DO=>DOUT);

end BEHAVE;
```

Verilog Initialization Example

```
module MYMEM (CLK, WE, ADDR, DIN, DOUT);
input CLK, WE;
input [8:0] ADDR;
input [7:0] DIN;
output [7:0] DOUT;

wire logic0, logic1;

//synopsys dc_script_begin
//set_attribute ram0 INIT_00
"0123456789ABCDEF0123456789ABCDEF0123456789ABCDEF0123456789ABCDEF" -type string
//set_attribute ram0 INIT_01
"FEDCBA9876543210FEDCBA9876543210FEDCBA9876543210FEDCBA9876543210" -type string
//synopsys dc_script_end

assign logic0 = 1'b0;
assign logic1 = 1'b1;

RAMB4_S8 ram0 (.WE(WE), .EN(logic1), .RST(logic0), .CLK(CLK), .ADDR(ADDR), .DI(DIN),
.DO(DOUT));
//synopsys translate_off
defparam ram0.INIT_00 =
256h'0123456789ABCDEF0123456789ABCDEF0123456789ABCDEF0123456789ABCDEF;
defparam ram0.INIT_01 =
256h'FEDCBA9876543210FEDCBA9876543210FEDCBA9876543210FEDCBA9876543210;
//synopsys translate_on
endmodule
```

Using SelectI/O

The Virtex-E FPGA series includes a highly configurable, high-performance I/O resource, called SelectI/O™ to provide support for a wide variety of I/O standards. The SelectI/O resource is a robust set of features including programmable control of output drive strength, slew rate, and input delay and hold time. Taking advantage of the flexibility and SelectI/O features and the design considerations described in this document can improve and simplify system level design.

Introduction

As FPGAs continue to grow in size and capacity, the larger and more complex systems designed for them demand an increased variety of I/O standards. Furthermore, as system clock speeds continue to increase, the need for high performance I/O becomes more important.

While chip-to-chip delays have an increasingly substantial impact on overall system speed, the task of achieving the desired system performance becomes more difficult with the proliferation of low-voltage I/O standards. SelectI/O, the revolutionary input/output resources of Virtex-E devices, resolve this potential problem by providing a highly configurable, high-performance alternative to the I/O resources of more conventional programmable devices. Virtex-E SelectI/O features combine the flexibility and time-to-market advantages of programmable logic with the high performance previously available only with ASICs and custom ICs.

Each SelectI/O block can support up to 20 I/O standards. Supporting such a variety of I/O standards allows the support of a wide variety of applications, from general purpose standard applications to high-speed low-voltage memory busses.

SelectI/O blocks also provide selectable output drive strengths and programmable slew rates for the LVTTL output buffers, as well as an optional, programmable weak pull-up, weak pull-down, or weak “keeper” circuit ideal for use in external bussing applications.

Each Input/Output Block (IOB) includes three registers, one each for the input, output, and 3-state signals within the IOB. These registers are optionally configurable as either a D-type flip-flop or as a level sensitive latch.

The input buffer has an optional delay element used to guarantee a zero hold time requirement for input signals registered within the IOB.

The Virtex-E SelectI/O features also provide dedicated resources for input reference voltage (V_{REF}) and output source voltage (V_{CCO}), along with a convenient banking system that simplifies board design.

By taking advantage of the built-in features and wide variety of I/O standards supported by the SelectI/O features, system-level design and board design can be greatly simplified and improved.

Fundamentals

Modern bus applications, pioneered by the largest and most influential companies in the digital electronics industry, are commonly introduced with a new I/O standard tailored specifically to the needs of that application. The bus I/O standards provide specifications to other vendors who create products designed to interface with these applications. Each standard often has its own specifications for current, voltage, I/O buffering, and termination techniques.

The ability to provide the flexibility and time-to-market advantages of programmable logic is increasingly dependent on the capability of the programmable logic device to support an ever increasing variety of I/O standards

The SelectI/O resources feature highly configurable input and output buffers which provide support for a wide variety of I/O standards. As shown in Table 18, each buffer type can support a variety of voltage requirements.

Table 18: **Virtex-E Supported I/O Standards**

I/O Standard	Output V_{CCO}	Input V_{CCO}	Input V_{REF}	Board Termination Voltage (V_{TT})
LVTTL	3.3	3.3	N/A	N/A
LVCMOS2	2.5	2.5	N/A	N/A
LVCMOS18	1.8	1.8	N/A	N/A
SSTL3 I & II	3.3	N/A	1.50	1.50
SSTL2 I & II	2.5	N/A	1.25	1.25
GTL	N/A	N/A	0.80	1.20
GTL+	N/A	N/A	1.0	1.50
HSTL I	1.5	N/A	0.75	0.75
HSTL III & IV	1.5	N/A	0.90	1.50
CTT	3.3	N/A	1.50	1.50
AGP-2X	3.3	N/A	1.32	N/A
PCI33_3	3.3	3.3	N/A	N/A
PCI66_3	3.3	3.3	N/A	N/A
BLVDS & LVDS	2.5	N/A	N/A	N/A
LVPECL	3.3	N/A	N/A	N/A

Overview of Supported I/O Standards

This section provides a brief overview of the I/O standards supported by all Virtex-E devices.

While most I/O standards specify a range of allowed voltages, this document records typical voltage values only. Detailed information on each specification can be found on the Electronic Industry Alliance Jedec website at:

http://www.jedec.org

LVTTL — Low-Voltage TTL

The Low-Voltage TTL, or LVTTL standard is a general purpose EIA/JESDSA standard for 3.3V applications that uses an LVTTL input buffer and a Push-Pull output buffer. This standard requires a 3.3V output source voltage (V_{CCO}), but does not require the use of a reference voltage (V_{REF}) or a termination voltage (V_{TT}).

LVCMOS2 — Low-Voltage CMOS for 2.5 Volts

The Low-Voltage CMOS for 2.5 Volts or lower, or LVCMOS2 standard is an extension of the LVCMOS standard (JESD 8.-5) used for general purpose 2.5V applications. This standard requires a 2.5V output source voltage (V_{CCO}), but does not require the use of a reference voltage (V_{REF}) or a board termination voltage (V_{TT}).

LVCMOS18 — 1.8 V Low Voltage CMOS

This standard is an extension of the LVCMOS standard. It is used in general purpose 1.8 V applications. The use of a reference voltage (V_{REF}) or a board termination voltage (V_{TT}) is not required.

PCI — Peripheral Component Interface

The Peripheral Component Interface, or PCI standard specifies support for both 33 MHz and 66 MHz PCI bus applications. It uses a LVTTL input buffer and a Push-Pull output buffer. This standard does not require the use of a reference voltage (V_{REF}) or a board termination voltage (V_{TT}), however, it does require a 3.3V output source voltage (V_{CCO}).

GTL — Gunning Transceiver Logic Terminated

The Gunning Transceiver Logic, or GTL standard is a high-speed bus standard (JESD8.3) invented by Xerox. Xilinx has implemented the terminated variation for this standard. This standard requires a differential amplifier input buffer and a Open Drain output buffer.

GTL+ — Gunning Transceiver Logic Plus

The Gunning Transceiver Logic Plus, or GTL+ standard is a high-speed bus standard (JESD8.3) first used by the Pentium Pro processor.

HSTL — High-Speed Transceiver Logic

The High-Speed Transceiver Logic, or HSTL standard is a general purpose high-speed, 1.5V bus standard sponsored by IBM (EIA/JESD 8-6). This standard has four variations or classes. SelectI/O devices support Class I, III, and IV. This

standard requires a Differential Amplifier input buffer and a Push-Pull output buffer.

SSTL3 — Stub Series Terminated Logic for 3.3V

The Stub Series Terminated Logic for 3.3V, or SSTL3 standard is a general purpose 3.3V memory bus standard also sponsored by Hitachi and IBM (JESD8-8). This standard has two classes, I and II. SelectI/O devices support both classes for the SSTL3 standard. This standard requires a Differential Amplifier input buffer and an Push-Pull output buffer.

SSTL2 — Stub Series Terminated Logic for 2.5V

The Stub Series Terminated Logic for 2.5V, or SSTL2 standard is a general purpose 2.5V memory bus standard sponsored by Hitachi and IBM (JESD8-9). This standard has two classes, I and II. SelectI/O devices support both classes for the SSTL2 standard. This standard requires a Differential Amplifier input buffer and an Push-Pull output buffer.

CTT — Center Tap Terminated

The Center Tap Terminated, or CTT standard is a 3.3V memory bus standard sponsored by Fujitsu (JESD8-4). This standard requires a Differential Amplifier input buffer and a Push-Pull output buffer.

AGP-2X — Advanced Graphics Port

The Intel AGP standard is a 3.3V Advanced Graphics Port-2X bus standard used with the Pentium II processor for graphics applications. This standard requires a Push-Pull output buffer and a Differential Amplifier input buffer.

LVDS — Low Voltage Differential Signal

LVDS is a differential I/O standard. It requires that one data bit is carried through two signal lines. As with all differential signaling standards, LVDS has an inherent noise immunity over single-ended I/O standards. The voltage swing between two signal lines is approximately 350mV. The use of a reference voltage (V_{REF}) or a board termination voltage (V_{TT}) is not required. LVDS requires the use of two pins per input or output. LVDS requires external resistor termination.

BLVDS — Bus LVDS

This standard allows for bidirectional LVDS communication between two or more devices. The external resistor termination is different than the one for standard LVDS.

LVPECL — Low Voltage Positive Emitter Coupled Logic

LVPECL is another differential I/O standard. It requires two signal lines for transmitting one data bit. This standard specifies two pins per input or output. The voltage swing between these two signal lines is approximately 850 mV. The use of a reference voltage (V_{REF}) or a board termination voltage (V_{TT}) is not required. The LVPECL standard requires external resistor termination.

Library Symbols

The Xilinx library includes an extensive list of symbols designed to provide support for the variety of SelectI/O features. Most of these symbols represent variations of the five generic SelectI/O symbols.

- IBUF (input buffer)
- IBUFG (global clock input buffer)
- OBUF (output buffer)
- OBUFT (3-state output buffer)
- IOBUF (input/output buffer)

IBUF

Signals used as inputs to the Virtex-E device must source an input buffer (IBUF) via an external input port. The generic Virtex-E IBUF symbol appears in Figure 37. The extension

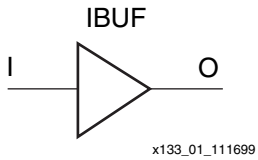

Figure 37: **Input Buffer (IBUF) Symbols**

to the base name defines which I/O standard the IBUF uses. The assumed standard is LVTTL when the generic IBUF has no specified extension.

The following list details the variations of the IBUF symbol:

- IBUF
- IBUF_LVCMOS2
- IBUF_PCI33_3
- IBUF_PCI66_3
- IBUF_GTL
- IBUF_GTLP
- IBUF_HSTL_I
- IBUF_HSTL_III
- IBUF_HSTL_IV
- IBUF_SSTL3_I
- IBUF_SSTL3_II
- IBUF_SSTL2_I
- IBUF_SSTL2_II
- IBUF_CTT
- IBUF_AGP
- IBUF_LVCMOS18
- IBUF_LVDS
- IBUF_LVPECL

When the IBUF symbol supports an I/O standard that requires a V_{REF}, the IBUF automatically configures as a differential amplifier input buffer. The V_{REF} voltage must be supplied on the V_{REF} pins. In the case of LVDS, LVPECL, and BLVDS, V_{REF} is not required.

The voltage reference signal is "banked" within the Virtex-E device on a half-edge basis such that for all packages there are eight independent V_{REF} banks internally. See Figure 38 for a representation of the Virtex-E I/O banks. Within each bank approximately one of every six I/O pins is automatically configured as a V_{REF} input. After placing a differential amplifier input signal within a given V_{REF} bank, the same external source must drive all I/O pins configured as a V_{REF} input.

IBUF placement restrictions require that any differential amplifier input signals within a bank be of the same standard. How to specify a specific location for the IBUF via the LOC property is described below. Table 19 summarizes the Virtex-E input standards compatibility requirements.

An optional delay element is associated with each IBUF. When the IBUF drives a flip-flop within the IOB, the delay element by default activates to ensure a zero hold-time requirement. The NODELAY=TRUE property overrides this default.

When the IBUF does not drive a flip-flop within the IOB, the delay element de-activates by default to provide higher performance. To delay the input signal, activate the delay element with the DELAY=TRUE property.

Table 19: **Xilinx Input Standards Compatibility Requirements**

Rule 1	Standards with the same input V_{CCO}, output V_{CCO}, and V_{REF} can be placed within the same bank.

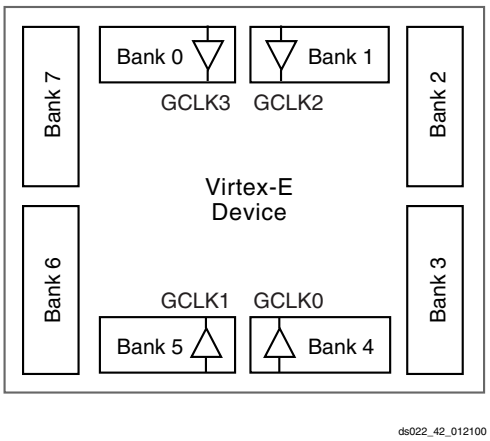

Figure 38: **Virtex-E I/O Banks**

IBUFG

Signals used as high fanout clock inputs to the Virtex-E device should drive a global clock input buffer (IBUFG) via an external input port in order to take advantage of one of the four dedicated global clock distribution networks. The output of the IBUFG symbol can drive only a CLKDLL, CLKDLLHF, or BUFG symbol. The generic Virtex-E IBUFG symbol appears in Figure 39.

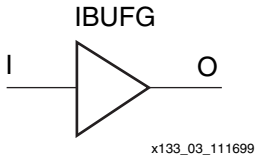

Figure 39: **Virtex-E Global Clock Input Buffer (IBUFG) Symbol**

The extension to the base name determines which I/O standard is used by the IBUFG. With no extension specified for the generic IBUFG symbol, the assumed standard is LVTTL.

The following list details variations of the IBUFG symbol.

- IBUFG
- IBUFG_LVCMOS2
- IBUFG_PCI33_3
- IBUFG_PCI66_3
- IBUFG_GTL
- IBUFG_GTLP
- IBUFG_HSTL_I
- IBUFG_HSTL_III
- IBUFG_HSTL_IV
- IBUFG_SSTL3_I
- IBUFG_SSTL3_II
- IBUFG_SSTL2_I
- IBUFG_SSTL2_II
- IBUFG_CTT
- IBUFG_AGP
- IBUFG_LVCMOS18
- IBUFG_LVDS
- IBUFG_LVPECL

When the IBUFG symbol supports an I/O standard that requires a differential amplifier input, the IBUFG automatically configures as a differential amplifier input buffer. The low-voltage I/O standards with a differential amplifier input require an external reference voltage input V_{REF}.

The voltage reference signal is "banked" within the Virtex-E device on a half-edge basis such that for all packages there are eight independent V_{REF} banks internally. See Figure 38 for a representation of the Virtex-E I/O banks. Within each bank approximately one of every six I/O pins is automatically configured as a V_{REF} input. After placing a differential amplifier input signal within a given V_{REF} bank, the same external source must drive all I/O pins configured as a V_{REF} input.

IBUFG placement restrictions require any differential amplifier input signals within a bank be of the same standard. The LOC property can specify a location for the IBUFG.

As an added convenience, the BUFGP can be used to instantiate a high fanout clock input. The BUFGP symbol

represents a combination of the LVTTL IBUFG and BUFG symbols, such that the output of the BUFGP can connect directly to the clock pins throughout the design.

Unlike previous architectures, the Virtex-E BUFGP symbol can only be placed in a global clock pad location. The LOC property can specify a location for the BUFGP.

OBUF

An OBUF must drive outputs through an external output port. The generic output buffer (OBUF) symbol appears in Figure 40.

The extension to the base name defines which I/O standard the OBUF uses. With no extension specified for the generic OBUF symbol, the assumed standard is slew rate limited LVTTL with 12 mA drive strength.

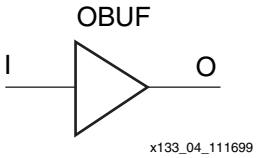

Figure 40: **Virtex-E Output Buffer (OBUF) Symbol**

The LVTTL OBUF additionally can support one of two slew rate modes to minimize bus transients. By default, the slew rate for each output buffer is reduced to minimize power bus transients when switching non-critical signals.

LVTTL output buffers have selectable drive strengths.

The format for LVTTL OBUF symbol names is as follows:

OBUF_<slew_rate>_<drive_strength>

where <slew_rate> is either F (Fast) or S (Slow), and <drive_strength> is specified in milliamps (2, 4, 6, 8, 12, 16, or 24).

The following list details variations of the OBUF symbol.

- OBUF
- OBUF_S_2
- OBUF_S_4
- OBUF_S_6
- OBUF_S_8
- OBUF_S_12
- OBUF_S_16
- OBUF_S_24
- OBUF_F_2
- OBUF_F_4
- OBUF_F_6
- OBUF_F_8
- OBUF_F_12
- OBUF_F_16
- OBUF_F_24
- OBUF_LVCMOS2
- OBUF_PCI33_3
- OBUF_PCI66_3
- OBUF_GTL
- OBUF_GTLP
- OBUF_HSTL_I
- OBUF_HSTL_III
- OBUF_HSTL_IV
- OBUF_SSTL3_I
- OBUF_SSTL3_II
- OBUF_SSTL2_I
- OBUF_SSTL2_II
- OBUF_CTT
- OBUF_AGP
- OBUF_LVCMOS18
- OBUF_LVDS
- OBUF_LVPECL

The Virtex-E series supports eight banks for the HQ and PQ packages. The CS packages support four V_{CCO} banks.

OBUF placement restrictions require that within a given V_{CCO} bank each OBUF share the same output source drive voltage. Input buffers of any type and output buffers that do not require V_{CCO} can be placed within any V_{CCO} bank. Table 20 summarizes the Virtex-E output compatibility requirements. The LOC property can specify a location for the OBUF.

Table 20: **Output Standards Compatibility Requirements**

Rule 1	Only outputs with standards that share compatible V_{CCO} can be used within the same bank.
Rule 2	There are no placement restrictions for outputs with standards that do not require a V_{CCO}.
V_{CCO}	Compatible Standards
3.3	LVTTL, SSTL3_I, SSTL3_II, CTT, AGP, GTL, GTL+, PCI33_3, PCI66_3
2.5	SSTL2_I, SSTL2_II, LVCMOS2, GTL, GTL+
1.5	HSTL_I, HSTL_III, HSTL_IV, GTL, GTL+

OBUFT

The generic 3-state output buffer OBUFT (see Figure 41) typically implements 3-state outputs or bidirectional I/O.

The extension to the base name defines which I/O standard OBUFT uses. With no extension specified for the generic OBUFT symbol, the assumed standard is slew rate limited LVTTL with 12 mA drive strength.

The LVTTL OBUFT additionally can support one of two slew rate modes to minimize bus transients. By default, the slew rate for each output buffer is reduced to minimize power bus transients when switching non-critical signals.

LVTTL 3-state output buffers have selectable drive strengths.

The format for LVTTL OBUFT symbol names is as follows:

OBUFT_<slew_rate>_<drive_strength>

where <slew_rate> is either F (Fast) or S (Slow), and <drive_strength> is specified in milliamps (2, 4, 6, 8, 12, 16, or 24).

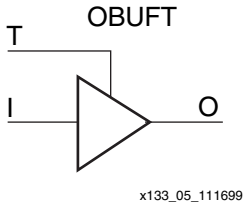

Figure 41: **3-State Output Buffer Symbol (OBUFT)**

The following list details variations of the OBUFT symbol.

- OBUFT
- OBUFT_S_2
- OBUFT_S_4
- OBUFT_S_6
- OBUFT_S_8
- OBUFT_S_12
- OBUFT_S_16
- OBUFT_S_24
- OBUFT_F_2
- OBUFT_F_4
- OBUFT_F_6
- OBUFT_F_8
- OBUFT_F_12
- OBUFT_F_16
- OBUFT_F_24
- OBUFT_LVCMOS2
- OBUFT_PCI33_3
- OBUFT_PCI66_3
- OBUFT_GTL
- OBUFT_GTLP
- OBUFT_HSTL_I
- OBUFT_HSTL_III
- OBUFT_HSTL_IV
- OBUFT_SSTL3_I
- OBUFT_SSTL3_II
- OBUFT_SSTL2_I
- OBUFT_SSTL2_II
- OBUFT_CTT
- OBUFT_AGP
- OBUFT_LVCMOS18
- OBUFT_LVDS
- OBUFT_LVPECL

The Virtex-E series supports eight banks for the HQ and PQ packages. The CS package supports four V_{CCO} banks.

The SelectI/O OBUFT placement restrictions require that within a given V_{CCO} bank each OBUFT share the same output source drive voltage. Input buffers of any type and output buffers that do not require V_{CCO} can be placed within the same V_{CCO} bank.

The LOC property can specify a location for the OBUFT.

3-state output buffers and bidirectional buffers can have either a weak pull-up resistor, a weak pull-down resistor, or a weak “keeper” circuit. Control this feature by adding the appropriate symbol to the output net of the OBUFT (PULLUP, PULLDOWN, or KEEPER).

The weak “keeper” circuit requires the input buffer within the IOB to sample the I/O signal. So, OBUFTs programmed for an I/O standard that requires a V_{REF} have automatic placement of a V_{REF} in the bank with an OBUFT configured with a weak “keeper” circuit. This restriction does not affect most circuit design as applications using an OBUFT configured with a weak “keeper” typically implement a bidirectional I/O. In this case the IBUF (and the corresponding V_{REF}) are explicitly placed.

The LOC property can specify a location for the OBUFT.

IOBUF

Use the IOBUF symbol for bidirectional signals that require both an input buffer and a 3-state output buffer with an active high 3-state pin. The generic input/output buffer IOBUF appears in Figure 42.

The extension to the base name defines which I/O standard the IOBUF uses. With no extension specified for the generic IOBUF symbol, the assumed standard is LVTTL input buffer and slew rate limited LVTTL with 12 mA drive strength for the output buffer.

The LVTTL IOBUF additionally can support one of two slew rate modes to minimize bus transients. By default, the slew rate for each output buffer is reduced to minimize power bus transients when switching non-critical signals.

LVTTL bidirectional buffers have selectable output drive strengths.

The format for LVTTL IOBUF symbol names is as follows:

IOBUF_<slew_rate>_<drive_strength>

where <slew_rate> is either F (Fast) or S (Slow), and <drive_strength> is specified in milliamps (2, 4, 6, 8, 12, 16, or 24).

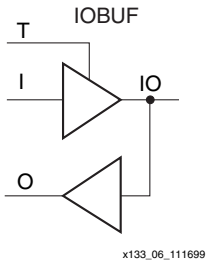

Figure 42: **Input/Output Buffer Symbol (IOBUF)**

The following list details variations of the IOBUF symbol.

- IOBUF
- IOBUF_S_2
- IOBUF_S_4
- IOBUF_S_6
- IOBUF_S_8
- IOBUF_S_12
- IOBUF_S_16
- IOBUF_S_24
- IOBUF_F_2
- IOBUF_F_4
- IOBUF_F_6
- IOBUF_F_8
- IOBUF_F_12
- IOBUF_F_16
- IOBUF_F_24
- IOBUF_LVCMOS2
- IOBUF_PCI33_3
- IOBUF_PCI66_3
- IOBUF_GTL
- IOBUF_GTLP
- IOBUF_HSTL_I
- IOBUF_HSTL_III
- IOBUF_HSTL_IV
- IOBUF_SSTL3_I
- IOBUF_SSTL3_II
- IOBUF_SSTL2_I
- IOBUF_SSTL2_II
- IOBUF_CTT
- IOBUF_AGP
- IOBUF_LVCMOS18
- IOBUF_LVDS
- IOBUF_LVPECL

When the IOBUF symbol used supports an I/O standard that requires a differential amplifier input, the IOBUF automatically configures with a differential amplifier input buffer. The low-voltage I/O standards with a differential amplifier input require an external reference voltage input V_{REF}.

The voltage reference signal is “banked” within the Virtex-E device on a half-edge basis such that for all packages there are eight independent V_{REF} banks internally. See Figure 38, page 33 for a representation of the Virtex-E I/O banks. Within each bank approximately one of every six I/O pins is automatically configured as a V_{REF} input. After placing a differential amplifier input signal within a given V_{REF} bank, the same external source must drive all I/O pins configured as a V_{REF} input.

IOBUF placement restrictions require any differential amplifier input signals within a bank be of the same standard.

The Virtex-E series supports eight banks for the HQ and PQ packages. The CS package supports four V_{CCO} banks.

Additional restrictions on the Virtex-E SelectI/O IOBUF placement require that within a given V_{CCO} bank each IOBUF must share the same output source drive voltage. Input buffers of any type and output buffers that do not require V_{CCO} can be placed within the same V_{CCO} bank. The LOC property can specify a location for the IOBUF.

An optional delay element is associated with the input path in each IOBUF. When the IOBUF drives an input flip-flop within the IOB, the delay element activates by default to ensure a zero hold-time requirement. Override this default with the NODELAY=TRUE property.

In the case when the IOBUF does not drive an input flip-flop within the IOB, the delay element de-activates by default to provide higher performance. To delay the input signal, activate the delay element with the DELAY=TRUE property.

3-state output buffers and bidirectional buffers can have either a weak pull-up resistor, a weak pull-down resistor, or a weak “keeper” circuit. Control this feature by adding the appropriate symbol to the output net of the IOBUF (PULLUP, PULLDOWN, or KEEPER).

SelectI/O Properties

Access to some of the SelectI/O features (for example, location constraints, input delay, output drive strength, and slew rate) is available through properties associated with these features.

Input Delay Properties

An optional delay element is associated with each IBUF. When the IBUF drives a flip-flop within the IOB, the delay element activates by default to ensure a zero hold-time requirement. Use the NODELAY=TRUE property to override this default.

In the case when the IBUF does not drive a flip-flop within the IOB, the delay element by default de-activates to provide higher performance. To delay the input signal, activate the delay element with the DELAY=TRUE property.

IOB Flip-Flop/Latch Property

The Virtex-E series I/O Block (IOB) includes an optional register on the input path, an optional register on the output path, and an optional register on the 3-state control pin. The design implementation software automatically takes advantage of these registers when the following option for the Map program is specified.

map –pr b <filename>

Alternatively, the IOB = TRUE property can be placed on a register to force the mapper to place the register in an IOB.

Location Constraints

Specify the location of each SelectI/O symbol with the location constraint LOC attached to the SelectI/O symbol. The external port identifier indicates the value of the location constrain. The format of the port identifier depends on the package chosen for the specific design.

The LOC properties use the following form:

LOC=A42

LOC=P37

Output Slew Rate Property

As mentioned above, a variety of symbol names provide the option of choosing the desired slew rate for the output buffers. In the case of the LVTTL output buffers (OBUF, OBUFT, and IOBUF), slew rate control can be alternatively programed with the SLEW= property. By default, the slew rate for each output buffer is reduced to minimize power bus transients when switching non-critical signals. The SLEW= property has one of the two following values.

SLEW=SLOW

SLEW=FAST

Output Drive Strength Property

The desired output drive strength can be additionally specified by choosing the appropriate library symbol. The Xilinx library also provides an alternative method for specifying this feature. For the LVTTL output buffers (OBUF, OBUFT, and IOBUF, the desired drive strength can be specified with the DRIVE= property. This property could have one of the following seven values.

DRIVE=2
DRIVE=4
DRIVE=6
DRIVE=8
DRIVE=12 (Default)
DRIVE=16
DRIVE=24

Design Considerations

Reference Voltage (V_{REF}) Pins

Low-voltage I/O standards with a differential amplifier input buffer require an input reference voltage (V_{REF}). Provide the V_{REF} as an external signal to the device.

The voltage reference signal is “banked” within the device on a half-edge basis such that for all packages there are eight independent V_{REF} banks internally. See Figure 38 for a representation of the Virtex-E I/O banks. Within each bank approximately one of every six I/O pins is automatically configured as a V_{REF} input. After placing a differential amplifier input signal within a given V_{REF} bank, the same external source must drive all I/O pins configured as a V_{REF} input.

Within each V_{REF} bank, any input buffers that require a V_{REF} signal must be of the same type. Output buffers of any type and input buffers can be placed without requiring a reference voltage within the same V_{REF} bank.

Output Drive Source Voltage (V_{CCO}) Pins

Many of the low voltage I/O standards supported by SelectI/O devices require a different output drive source voltage (V_{CCO}). As a result each device can often have to support multiple output drive source voltages.

The Virtex-E series supports eight banks for the HQ and PQ packages. The CS package supports four V_{CCO} banks.

Output buffers within a given V_{CCO} bank must share the same output drive source voltage. Input buffers for LVTTL, LVCMOS2, LVCMOS18, PCI33_3, and PCI 66_3 use the V_{CCO} voltage for Input V_{CCO} voltage.

Transmission Line Effects

The delay of an electrical signal along a wire is dominated by the rise and fall times when the signal travels a short distance. Transmission line delays vary with inductance and capacitance, but a well-designed board can experience delays of approximately 180 ps per inch.

Transmission line effects, or reflections, typically start at 1.5" for fast (1.5 ns) rise and fall times. Poor (or non-existent) termination or changes in the transmission line impedance cause these reflections and can cause additional delay in longer traces. As system speeds continue to increase, the effect of I/O delays can become a limiting factor and therefore transmission line termination becomes increasingly more important.

Termination Techniques

A variety of termination techniques reduce the impact of transmission line effects.

The following are output termination techniques:

- None
- Series
- Parallel (Shunt)
- Series and Parallel (Series-Shunt)

Input termination techniques include the following.

- None
- Parallel (Shunt)

These termination techniques can be applied in any combination. A generic example of each combination of termination methods appears in Figure 43.

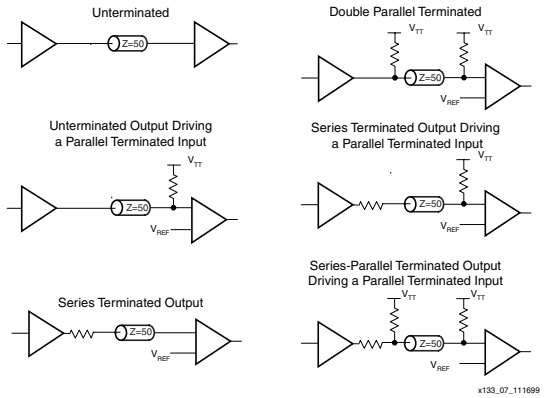

Figure 43: **Overview of Standard Input and Output Termination Methods**

Simultaneous Switching Guidelines

Ground bounce can occur with high-speed digital ICs when multiple outputs change states simultaneously, causing undesired transient behavior on an output, or in the internal logic. This problem is also referred to as the Simultaneous Switching Output (SSO) problem.

Ground bounce is primarily due to current changes in the combined inductance of ground pins, bond wires, and ground metallization. The IC internal ground level deviates from the external system ground level for a short duration (a few nanoseconds) after multiple outputs change state simultaneously.

Ground bounce affects stable Low outputs and all inputs because they interpret the incoming signal by comparing it to the internal ground. If the ground bounce amplitude exceeds the actual instantaneous noise margin, then a non-changing input can be interpreted as a short pulse with a polarity opposite to the ground bounce.

Table 21 provides guidelines for the maximum number of simultaneously switching outputs allowed per output power/ground pair to avoid the effects of ground bounce. See Table 22 for the number of effective output power/ground pairs for each Virtex-E device and package combination.

Table 21: **Guidelines for Max Number of Simultaneously Switching Outputs per Power/Ground Pair**

Standard	Package		
	BGA, CS, FGA	HQ	PQ, TQ
LVTTL Slow Slew Rate, 2 mA drive	68	49	36
LVTTL Slow Slew Rate, 4 mA drive	41	31	20
LVTTL Slow Slew Rate, 6 mA drive	29	22	15
LVTTL Slow Slew Rate, 8 mA drive	22	17	12
LVTTL Slow Slew Rate, 12 mA drive	17	12	9
LVTTL Slow Slew Rate, 16 mA drive	14	10	7
LVTTL Slow Slew Rate, 24 mA drive	9	7	5
LVTTL Fast Slew Rate, 2 mA drive	40	29	21
LVTTL Fast Slew Rate, 4 mA drive	24	18	12
LVTTL Fast Slew Rate, 6 mA drive	17	13	9
LVTTL Fast Slew Rate, 8 mA drive	13	10	7
LVTTL Fast Slew Rate, 12 mA drive	10	7	5
LVTTL Fast Slew Rate, 16 mA drive	8	6	4
LVTTL Fast Slew Rate, 24 mA drive	5	4	3
LVCMOS2	10	7	5
PCI	8	6	4
GTL	4	4	4
GTL+	4	4	4

Table 21: **Guidelines for Max Number of Simultaneously Switching Outputs per Power/Ground Pair *(Continued)***

Standard	Package		
	BGA, CS, FGA	HQ	PQ, TQ
HSTL Class I	18	13	9
HSTL Class III	9	7	5
HSTL Class IV	5	4	3
SSTL2 Class I	15	11	8
SSTL2 Class II	10	7	5
SSTL3 Class I	11	8	6
SSTL3 Class II	7	5	4
CTT	14	10	7
AGP	9	7	5

Note: This analysis assumes a 35 pF load for each output.

Table 22: **Virtex-E Equivalent Power/Ground Pairs**

Pkg/Part	XCV100E	XCV200E	XCV300E	XCV400E	XCV600E	XCV1000E	XCV1600E	XCV2000E
CS144	12	12						
PQ240	20	20	20	20				
HQ240					20	20		
BG352	20	32	32					
BG432			32	40	40			
BG560				40	40	56	58	60
FG256(1)	20	24	24					
FG456		40	40					
FG676				54	56			
FG680(2)					46	56	56	56
FG860						58	60	64
FG900					56	58		60
FG1156						96	104	120

Notes:
1. Virtex-E devices in FG256 packages have more V_{CCO} than Virtex series devices.
2. FG680 numbers are preliminary.

Application Examples

Creating a design with the SelectI/O features requires the instantiation of the desired library symbol within the design code. At the board level, designers need to know the termination techniques required for each I/O standard.

This section describes some common application examples illustrating the termination techniques recommended by each of the standards supported by the SelectI/O features.

Termination Examples

Circuit examples involving typical termination techniques for each of the SelectI/O standards follow. For a full range of accepted values for the DC voltage specifications for each standard, refer to the table associated with each figure.

The resistors used in each termination technique example and the transmission lines depicted represent board level components and are not meant to represent components on the device.

GTL

A sample circuit illustrating a valid termination technique for GTL is shown in Figure 44.

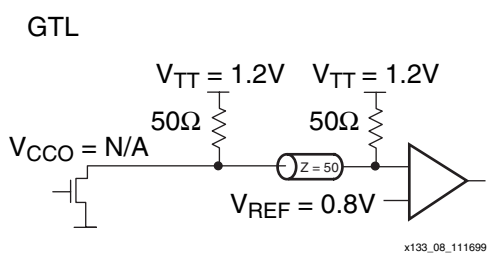

Figure 44: **Terminated GTL**

Table 23 lists DC voltage specifications.

Table 23: **GTL Voltage Specifications**

Parameter	Min	Typ	Max
V_{CCO}	-	N/A	-
$V_{REF} = N \times V_{TT}$[1]	0.74	0.8	0.86
V_{TT}	1.14	1.2	1.26
$V_{IH} = V_{REF} + 0.05$	0.79	0.85	-
$V_{IL} = V_{REF} - 0.05$	-	0.75	0.81
V_{OH}	-	-	-
V_{OL}	-	0.2	0.4
I_{OH} at V_{OH}(mA)	-	-	-
I_{OL}at V_{OL}(mA) at 0.4V	32	-	-
I_{OL}at V_{OL}(mA) at 0.2V	-	-	40

Notes:
1. N must be greater than or equal to 0.653 and less than or equal to 0.68.

GTL+

A sample circuit illustrating a valid termination technique for GTL+ appears in Figure 45. DC voltage specifications appear in Table 24.

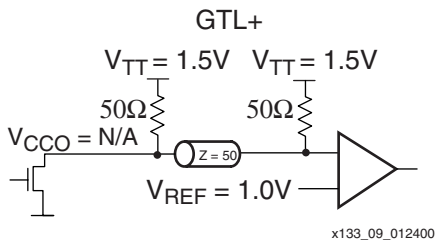

Figure 45: **Terminated GTL+**

Table 24: **GTL+ Voltage Specifications**

Parameter	Min	Typ	Max
V_{CCO}	-	-	-
$V_{REF} = N \times V_{TT}$[1]	0.88	1.0	1.12
V_{TT}	1.35	1.5	1.65
$V_{IH} = V_{REF} + 0.1$	0.98	1.1	-
$V_{IL} = V_{REF} - 0.1$	-	0.9	1.02
V_{OH}	-	-	-
V_{OL}	0.3	0.45	0.6
I_{OH} at V_{OH} (mA)	-	-	-
I_{OL}at V_{OL} (mA) at 0.6V	36	-	-
I_{OL}at V_{OL} (mA) at 0.3V	-	-	48

Notes:
1. N must be greater than or equal to 0.653 and less than or equal to 0.68.

HSTL

A sample circuit illustrating a valid termination technique for HSTL_I appears in Figure 46. A sample circuit illustrating a valid termination technique for HSTL_III appears in Figure 47.

Table 25: **HSTL Class I Voltage Specification**

Parameter	Min	Typ	Max
V_{CCO}	1.40	1.50	1.60
V_{REF}	0.68	0.75	0.90
V_{TT}	-	$V_{CCO} \times 0.5$	-
V_{IH}	$V_{REF} + 0.1$	-	-
V_{IL}	-	-	$V_{REF} - 0.1$
V_{OH}	$V_{CCO} - 0.4$	-	-
V_{OL}			0.4
I_{OH} at V_{OH} (mA)	–8	-	-
I_{OL}at V_{OL} (mA)	8	-	-

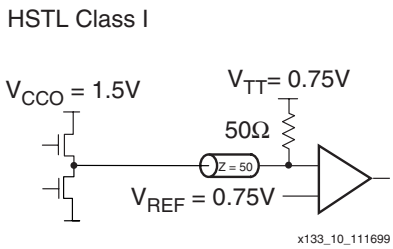

Figure 46: **Terminated HSTL Class I**

Table 26: **HSTL Class III Voltage Specification**

Parameter	Min	Typ	Max
V_{CCO}	1.40	1.50	1.60
V_{REF} (1)	-	0.90	-
V_{TT}	-	V_{CCO}	-
V_{IH}	$V_{REF} + 0.1$	-	-
V_{IL}	-	-	$V_{REF} - 0.1$
V_{OH}	$V_{CCO} - 0.4$	-	-
V_{OL}	-	-	0.4
I_{OH} at V_{OH} (mA)	–8	-	-
I_{OL}at V_{OL} (mA)	24	-	-

Note: Per EIA/JESD8-6, "The value of V_{REF} is to be selected by the user to provide optimum noise margin in the use conditions specified by the user."

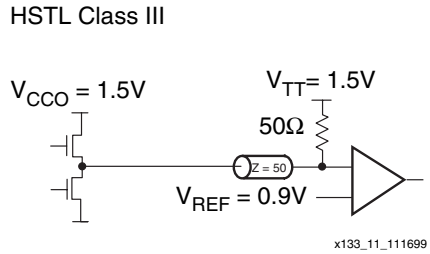

Figure 47: **Terminated HSTL Class III**

A sample circuit illustrating a valid termination technique for HSTL_IV appears in Figure 48.

Table 27: **HSTL Class IV Voltage Specification**

Parameter	Min	Typ	Max
V_{CCO}	1.40	1.50	1.60
V_{REF}	-	0.90	-
V_{TT}	-	V_{CCO}	-
V_{IH}	$V_{REF} + 0.1$	-	-
V_{IL}	-	-	$V_{REF} - 0.1$
V_{OH}	$V_{CCO} - 0.4$	-	-
V_{OL}	-	-	0.4
I_{OH} at V_{OH} (mA)	–8	-	-
I_{OL}at V_{OL} (mA)	48	-	-

Note: Per EIA/JESD8-6, "The value of V_{REF} is to be selected by the user to provide optimum noise margin in the use conditions specified by the user.

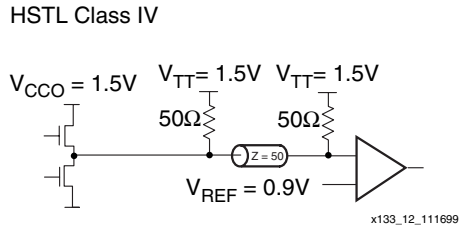

Figure 48: **Terminated HSTL Class IV**

SSTL3_I

A sample circuit illustrating a valid termination technique for SSTL3_I appears in Figure 49. DC voltage specifications appear in Table 28.

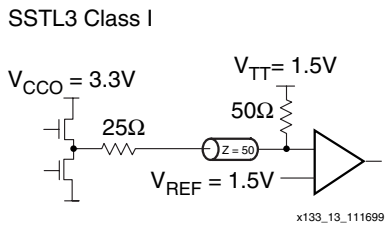

Figure 49: **Terminated SSTL3 Class I**

Table 28: **SSTL3_I Voltage Specifications**

Parameter	Min	Typ	Max
V_{CCO}	**3.0**	**3.3**	**3.6**
$V_{REF} = 0.45 \times V_{CCO}$	1.3	1.5	1.7
$V_{TT} = V_{REF}$	1.3	1.5	1.7
$V_{IH} = V_{REF} + 0.2$	1.5	1.7	3.9(1)
$V_{IL} = V_{REF} - 0.2$	–0.3(2)	1.3	1.5
$V_{OH} = V_{REF} + 0.6$	1.9	-	-
$V_{OL} = V_{REF} - 0.6$	-	-	1.1
I_{OH} at V_{OH} (mA)	–8	-	-
I_{OL}at V_{OL} (mA)	8	-	-

Notes:
1. V_{IH} maximum is V_{CCO} + 0.3
2. V_{IL} minimum does not conform to the formula

SSTL3_II

A sample circuit illustrating a valid termination technique for SSTL3_II appears in Figure 50. DC voltage specifications appear in Table 29.

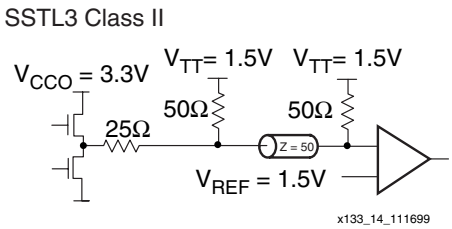

Figure 50: **Terminated SSTL3 Class II**

Table 29: **SSTL3_II Voltage Specifications**

Parameter	Min	Typ	Max
V_{CCO}	3.0	3.3	3.6
$V_{REF} = 0.45 \times V_{CCO}$	1.3	1.5	1.7
$V_{TT} = V_{REF}$	1.3	1.5	1.7
$V_{IH} = V_{REF} + 0.2$	1.5	1.7	3.9(1)
$V_{IL} = V_{REF} - 0.2$	–0.3(2)	1.3	1.5
$V_{OH} = V_{REF} + 0.8$	2.1	-	-
$V_{OL} = V_{REF} - 0.8$	-	-	0.9
I_{OH} at V_{OH} (mA)	–16	-	-
I_{OL}at V_{OL} (mA)	16	-	-

Notes:
1. V_{IH} maximum is V_{CCO} + 0.3
2. V_{IL} minimum does not conform to the formula

SSTL2_I

A sample circuit illustrating a valid termination technique for SSTL2_I appears in Figure 51. DC voltage specifications appear in Table 30.

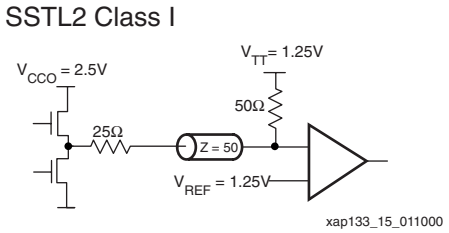

Figure 51: **Terminated SSTL2 Class I**

Table 30: **SSTL2_I Voltage Specifications**

Parameter	Min	Typ	Max
V_{CCO}	2.3	2.5	2.7
$V_{REF} = 0.5 \times V_{CCO}$	1.15	1.25	1.35
$V_{TT} = V_{REF} + N$(1)	1.11	1.25	1.39
$V_{IH} = V_{REF} + 0.18$	1.33	1.43	3.0(2)
$V_{IL} = V_{REF} - 0.18$	–0.3(3)	1.07	1.17
$V_{OH} = V_{REF} + 0.61$	1.76	-	-
$V_{OL} = V_{REF} - 0.61$	-	-	0.74
I_{OH} at V_{OH} (mA)	–7.6	-	-
I_{OL}at V_{OL} (mA)	7.6	-	-

Notes:
1. N must be greater than or equal to -0.04 and less than or equal to 0.04.
2. V_{IH} maximum is V_{CCO} + 0.3.
3. V_{IL} minimum does not conform to the formula.

SSTL2_II

A sample circuit illustrating a valid termination technique for SSTL2_II appears in Figure 52. DC voltage specifications appear in Table 31.

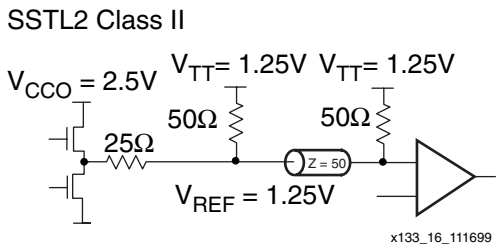

Figure 52: **Terminated SSTL2 Class II**

Table 31: **SSTL2_II Voltage Specifications**

Parameter	Min	Typ	Max
V_{CCO}	2.3	2.5	2.7
$V_{REF} = 0.5 \times V_{CCO}$	1.15	1.25	1.35
$V_{TT} = V_{REF} + N^{(1)}$	1.11	1.25	1.39
$V_{IH} = V_{REF} + 0.18$	1.33	1.43	$3.0^{(2)}$
$V_{IL} = V_{REF} - 0.18$	$-0.3^{(3)}$	1.07	1.17
$V_{OH} = V_{REF} + 0.8$	1.95	-	-
$V_{OL} = V_{REF} - 0.8$	-	-	0.55
I_{OH} at V_{OH} (mA)	–15.2	-	-
I_{OL} at V_{OL} (mA)	15.2	-	-

Notes:
1. N must be greater than or equal to -0.04 and less than or equal to 0.04.
2. V_{IH} maximum is V_{CCO} + 0.3.
3. V_{IL} minimum does not conform to the formula.

CTT

A sample circuit illustrating a valid termination technique for CTT appear in Figure 53. DC voltage specifications appear in Table 32.

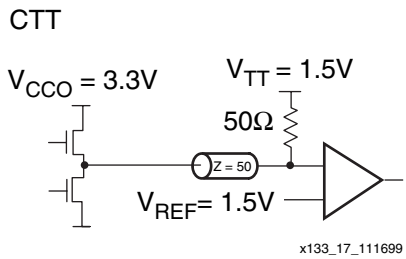

Figure 53: **Terminated CTT**

Table 32: **CTT Voltage Specifications**

Parameter	Min	Typ	Max
V_{CCO}	$2.05^{(1)}$	3.3	3.6
V_{REF}	1.35	1.5	1.65
V_{TT}	1.35	1.5	1.65
$V_{IH} = V_{REF} + 0.2$	1.55	1.7	-
$V_{IL} = V_{REF} - 0.2$	-	1.3	1.45
$V_{OH} = V_{REF} + 0.4$	1.75	1.9	-
$V_{OL} = V_{REF} - 0.4$	-	1.1	1.25
I_{OH} at V_{OH} (mA)	–8	-	-
I_{OL} at V_{OL} (mA)	8	-	-

Notes:
1. Timing delays are calculated based on V_{CCO} min of 3.0V.

PCI33_3 & PCI66_3

PCI33_3 or PCI66_3 require no termination. DC voltage specifications appear in Table 33.

Table 33: **PCI33_3 and PCI66_3 Voltage Specifications**

Parameter	Min	Typ	Max
V_{CCO}	3.0	3.3	3.6
V_{REF}	-	-	-
V_{TT}	-	-	-
$V_{IH} = 0.5 \times V_{CCO}$	1.5	1.65	$V_{CCO} + 0.5$
$V_{IL} = 0.3 \times V_{CCO}$	–0.5	0.99	1.08
$V_{OH} = 0.9 \times V_{CCO}$	2.7	-	-
$V_{OL} = 0.1 \times V_{CCO}$	-	-	0.36
I_{OH} at V_{OH} (mA)	Note 1	-	-
I_{OL} at V_{OL} (mA)	Note 1	-	-

Notes:
1. Tested according to the relevant specification.

LVTTL

LVTTL requires no termination. DC voltage specifications appears in Table 34.

Table 34: **LVTTL Voltage Specifications**

Parameter	Min	Typ	Max
V_{CCO}	3.0	3.3	3.6
V_{REF}	-	-	-
V_{TT}	-	-	-
V_{IH}	2.0	-	3.6
V_{IL}	–0.5	-	0.8
V_{OH}	2.4	-	-
V_{OL}	-	-	0.4
I_{OH} at V_{OH} (mA)	–24	-	-
I_{OL} at V_{OL} (mA)	24	-	-

Notes:
1. Note: V_{OL} and V_{OH} for lower drive currents sample tested.

LVCMOS2

LVCMOS2 requires no termination. DC voltage specifications appear in Table 35.

Table 35: **LVCMOS2 Voltage Specifications**

Parameter	Min	Typ	Max
V_{CCO}	2.3	2.5	2.7
V_{REF}	-	-	-
V_{TT}	-	-	-
V_{IH}	1.7	-	3.6
V_{IL}	–0.5	-	0.7
V_{OH}	1.9	-	-
V_{OL}	-	-	0.4
I_{OH} at V_{OH} (mA)	–12	-	-
I_{OL} at V_{OL} (mA)	12	-	-

LVCMOS18

LVCMOS18 does not require termination. Table 36 lists DC voltage specifications.

Table 36: **LVCMOS18 Voltage Specifications**

Parameter	Min	Typ	Max
V_{CCO}	1.70	1.80	1.90
V_{REF}	-	-	-
V_{TT}	-	-	-
V_{IH}	0.7 x V_{CCO}	-	1.95
V_{IL}	– 0.5	-	0.2 x V_{CCO}
V_{OH}	V_{CCO} – 0.4	-	-
V_{OL}	-	-	0.4
I_{OH} at V_{OH} (mA)	–8	-	-
I_{OL} at V_{OL} (mA)	8	-	-

AGP-2X

The specification for the AGP-2X standard does not document a recommended termination technique. DC voltage specifications appear in Table 37.

Table 37: **AGP-2X Voltage Specifications**

Parameter	Min	Typ	Max
V_{CCO}	3.0	3.3	3.6
$V_{REF} = N \times V_{CCO}$ (1)	1.17	1.32	1.48
V_{TT}	-	-	-
$V_{IH} = V_{REF} + 0.2$	1.37	1.52	-
$V_{IL} = V_{REF} - 0.2$	-	1.12	1.28
$V_{OH} = 0.9 \times V_{CCO}$	2.7	3.0	-
$V_{OL} = 0.1 \times V_{CCO}$	-	0.33	0.36
I_{OH} at V_{OH} (mA)	Note 2	-	-
I_{OL} at V_{OL} (mA)	Note 2	-	-

Notes:
1. N must be greater than or equal to 0.39 and less than or equal to 0.41.
2. Tested according to the relevant specification.

LVDS

Depending on whether the device is transmitting an LVDS signal or receiving an LVDS signal, there are two different circuits used for LVDS termination. A sample circuit illustrating a valid termination technique for transmitting LVDS signals appears in Figure 54. A sample circuit illustrating a valid termination for receiving LVDS signals appears in Figure 55. Table 38 lists DC voltage specifications. Further information on the specific termination resistor packs shown can be found on Table 40.

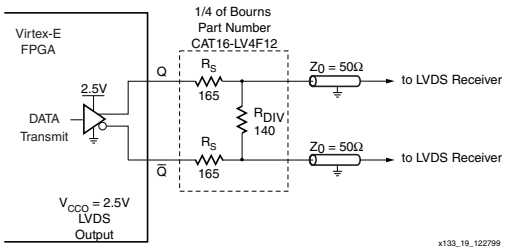

Figure 54: **Transmitting LVDS Signal Circuit**

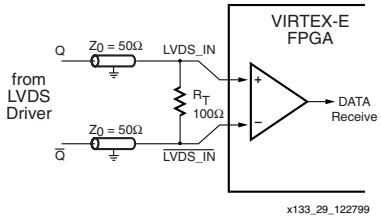

Figure 55: **Receiving LVDS Signal Circuit**

Table 38: **LVDS Voltage Specifications**

Parameter	Min	Typ	Max
V_{CCO}	2.375	2.5	2.625
V_{ICM}(2)	0.2	1.25	2.2
V_{OCM}(1)	1.125	1.25	1.375
V_{IDIFF} (1)	0.1	0.35	-
V_{ODIFF} (1)	0.25	0.35	0.45
V_{OH}(1)	1.25	-	-
V_{OL}(1)	-	-	1.25

Notes:
1. Measured with a 100 Ω resistor across Q and $\overline{Q}$.
2. Measured with a differential input voltage = +/– 350 mV.

LVPECL

Depending on whether the device is transmitting or receiving an LVPECL signal, two different circuits are used for LVPECL termination. A sample circuit illustrating a valid termination technique for transmitting LVPECL signals appears in Figure 56. A sample circuit illustrating a valid termination for receiving LVPECL signals appears in Figure 57. Table 39 lists DC voltage specifications. Further information on the specific termination resistor packs shown can be found on Table 40.

Table 39: **LVPECL Voltage Specifications**

Parameter	Min	Typ	Max
V_{CCO}	3.0	3.3	3.6
V_{REF}	-	-	-
V_{TT}	-	-	-
V_{IH}	1.49	-	2.72
V_{IL}	0.86	-	2.125
V_{OH}	1.8	-	-
V_{OL}	-	-	1.57

Notes:
1. For more detailed information, see **LVPECL DC Specifications**

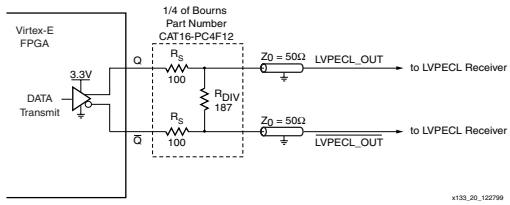

Figure 56: **Transmitting LVPECL Signal Circuit**

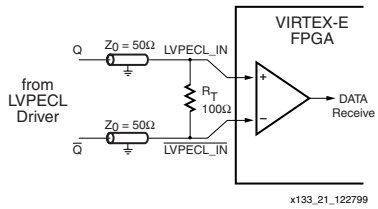

Figure 57: **Receiving LVPECL Signal Circuit**

Termination Resistor Packs

Resistor packs are available with the values and the configuration required for LVDS and LVPECL termination from Bourns, Inc., as listed in Table. For pricing and availability, please contact Bourns directly at http://www.bourns.com.

Table 40: **Bourns LVDS/LVPECL Resistor Packs**

Part Number	I/O Standard	Term. for:	Pairs/ Pack	Pins
CAT16–LV2F6	LVDS	Driver	2	8
CAT16–LV4F12	LVDS	Driver	4	16
CAT16–PC2F6	LVPECL	Driver	2	8
CAT16–PC4F12	LVPECL	Driver	4	16
CAT16–PT2F2	LVDS/LVPECL	Receiver	2	8
CAT16–PT4F4	LVDS/LVPECL	Receiver	4	16

LVDS Design Guide

The SelectI/O library elements have been expanded for Virtex-E devices to include new LVDS variants. At this time all of the cells might not be included in the Synthesis libraries. The 2.1i-Service Pack 2 update for Alliance and Foundation software includes these cells in the VHDL and Verilog libraries. It is necessary to combine these cells to create the P-side (positive) and N-side (negative) as described in the input, output, 3-state and bidirectional sections.

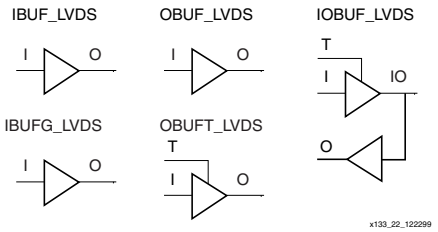

Figure 58: **LVDS elements**

Creating LVDS Global Clock Input Buffers

Global clock input buffers can be combined with adjacent IOBs to form LVDS clock input buffers. P-side is the GCLKPAD location; N-side is the adjacent IO_LVDS_DLL site.

Table 41: **Global Clock Input Buffer Pair Locations**

	GCLK 3		GCLK 2		GCLK 1		GCLK 0	
Pkg	P	N	P	N	P	N	P	N
CS144	A6	C6	A7	B7	M7	M6	K7	N8
PQ240	P213	P215	P210	P209	P89	P87	P92	P93
HQ240	P213	P215	P210	P209	P89	P87	P92	P93
BG352	D14	A15	B14	A13	AF14	AD14	AE13	AC13
BG432	D17	C17	A16	B16	AK16	AL17	AL16	AH15
BG560	A17	C18	D17	E17	AJ17	AM18	AL17	AM17
FG256	B8	A7	C9	A8	R8	T8	N8	N9
FG456	C11	B11	A11	D11	Yll	AA11	W12	U12
FG676	E13	B13	C13	F14	AB13	AF13	AA14	AC14
FG680	A20	C22	D21	A19	AU22	AT22	AW19	AT21
FG860	C22	A22	B22	D22	AY22	AW21	BA22	AW20
FG900	C15	A15	E15	E16	AK16	AH16	AJ16	AF16
FG1156	E17	C17	D17	J18	Al19	AL17	AH18	AM18

HDL Instantiation

Only one global clock input buffer is required to be instantiated in the design and placed on the correct GCLKPAD location. The N-side of the buffer is reserved and no other IOB is allowed to be placed on this location.

In the physical device, a configuration option is enabled that routes the pad wire to the differential input buffer located in the GCLKIOB. The output of this buffer then drives the output of the GCLKIOB cell. In EPIC it appears that the second buffer is unused. Any attempt to use this location for another purpose leads to a DRC error in the software.

VHDL Instantiation

```
gclk0_p : IBUFG_LVDS port map
(I=>clk_external, O=>clk_internal);
```

Verilog Instantiation

```
IBUFG_LVDS gclk0_p (.I(clk_external),
.O(clk_internal));
```

Location constraints

All LVDS buffers must be explicitly placed on a device. For the global clock input buffers this can be done with the following constraint in the .ucf or .ncf file.

```
NET clk_external LOC = GCLKPAD3;
```

GCLKPAD3 can also be replaced with the package pin name such as D17 for the BG432 package.

Optional N-side

Some designers might prefer to also instantiate the N-side buffer for the global clock buffer. This allows the top-level net list to include net connections for both PCB layout and system-level integration. In this case, only the output P-side IBUFG connection has a net connected to it. Since the N-side IBUFG does not have a connection in the EDIF net list, it is trimmed from the design in MAP.

VHDL Instantiation

```
gclk0_p : IBUFG_LVDS port map
(I=>clk_p_external, O=>clk_internal);

gclk0_n : IBUFG_LVDS port map
(I=>clk_n_external, O=>clk_internal);
```

Verilog Instantiation

```
IBUFG_LVDS gclk0_p (.I(clk_p_external),
.O(clk_internal));

IBUFG_LVDS gclk0_n (.I(clk_n_external),
.O(clk_internal));
```

Location Constraints

All LVDS buffers must be explicitly placed on a device. For the global clock input buffers this can be done with the following constraint in the .ucf or .ncf file.

```
NET clk_p_external LOC = GCLKPAD3;

NET clk_n_external LOC = C17;
```

GCLKPAD3 can also be replaced with the package pin name, such as D17 for the BG432 package.

Creating LVDS Input Buffers

An LVDS input buffer can be placed in a wide number of IOB locations. The exact location is dependent on the package that is used. The Virtex-E package information lists the possible locations as IO_L#P for the P-side and IO_L#N for the N-side where # is the pair number.

HDL Instantiation

Only one input buffer is required to be instantiated in the design and placed on the correct IO_L#P location. The N-side of the buffer is reserved and no other IOB is allowed to be placed on this location. In the physical device, a configuration option is enabled that routes the pad wire from the IO_L#N IOB to the differential input buffer located in the IO_L#P IOB. The output of this buffer then drives the output of the IO_L#P cell or the input register in the IO_L#P IOB. In EPIC it appears that the second buffer is unused. Any attempt to use this location for another purpose leads to a DRC error in the software.

VHDL Instantiation

```
data0_p : IBUF_LVDS port map (I=>data(0),
O=>data_int(0));
```

Verilog Instantiation

```
IBUF_LVDS data0_p (.I(data[0]),
.O(data_int[0]));
```

Location Constraints

All LVDS buffers must be explicitly placed on a device. For the input buffers this can be done with the following constraint in the .ucf or .ncf file.

```
NET data<0> LOC = D28; # IO_L0P
```

Optional N-side

Some designers might prefer to also instantiate the N-side buffer for the input buffer. This allows the top-level net list to include net connections for both PCB layout and system-level integration. In this case, only the output P-side IBUF connection has a net connected to it. Since the N-side IBUF does not have a connection in the EDIF net list, it is trimmed from the design in MAP.

VHDL Instantiation

```
data0_p : IBUF_LVDS port map
(I=>data_p(0), O=>data_int(0));

data0_n : IBUF_LVDS port map
(I=>data_n(0), O=>open);
```

Verilog Instantiation

```
IBUF_LVDS data0_p (.I(data_p[0]),
.O(data_int[0]));

IBUF_LVDS data0_n (.I(data_n[0]), .O());
```

Location Constraints

All LVDS buffers must be explicitly placed on a device. For the global clock input buffers this can be done with the following constraint in the .ucf or .ncf file.

```
NET data_p<0> LOC = D28; # IO_L0P

NET data_n<0> LOC = B29; # IO_L0N
```

Adding an Input Register

All LVDS buffers can have an input register in the IOB. The input register is in the P-side IOB only. All the normal IOB register options are available (FD, FDE, FDC, FDCE, FDP, FDPE, FDR, FDRE, FDS, FDSE, LD, LDE, LDC, LDCE, LDP, LDPE). The register elements can be inferred or explicitly instantiated in the HDL code.

The register elements can be packed in the IOB using the IOB property to TRUE on the register or by using the “map -pr [i|o|b]” where “i” is inputs only, “o” is outputs only and “b” is both inputs and outputs.

To improve design coding times VHDL and Verilog synthesis macro libraries available to explicitly create these structures. The input library macros are listed in Table 42. The I and IB inputs to the macros are the external net connections.

Table 42: **Input Library Macros**

Name	Inputs	Outputs
IBUFDS_FD_LVDS	I, IB, C	Q
IBUFDS_FDE_LVDS	I, IB, CE, C	Q
IBUFDS_FDC_LVDS	I, IB, C, CLR	Q
IBUFDS_FDCE_LVDS	I, IB, CE, C, CLR	Q
IBUFDS_FDP_LVDS	I, IB, C, PRE	Q
IBUFDS_FDPE_LVDS	I, IB, CE, C, PRE	Q
IBUFDS_FDR_LVDS	I, IB, C, R	Q
IBUFDS_FDRE_LVDS	I, IB, CE, C, R	Q
IBUFDS_FDS_LVDS	I, IB, C, S	Q
IBUFDS_FDSE_LVDS	I, IB, CE, C, S	Q
IBUFDS_LD_LVDS	I, IB, G	Q
IBUFDS_LDE_LVDS	I, IB, GE, G	Q
IBUFDS_LDC_LVDS	I, IB, G, CLR	Q
IBUFDS_LDCE_LVDS	I, IB, GE, G, CLR	Q
IBUFDS_LDP_LVDS	I, IB, G, PRE	Q
IBUFDS_LDPE_LVDS	I, IB, GE, G, PRE	Q

Creating LVDS Output Buffers

LVDS output buffers can be placed in a wide number of IOB locations. The exact locations are dependent on the package used. The Virtex-E package information lists the possible locations as IO_L#P for the P-side and IO_L#N for the N-side, where # is the pair number.

HDL Instantiation

Both output buffers are required to be instantiated in the design and placed on the correct IO_L#P and IO_L#N locations. The IOB must have the same net source the following pins, clock (C), set/reset (SR), output (O), output clock enable (OCE). In addition, the output (O) pins must be inverted with respect to each other, and if output registers are used, the INIT states must be opposite values (one HIGH and one LOW). Failure to follow these rules leads to DRC errors in software.

VHDL Instantiation

```
data0_p  : OBUF_LVDS port map
(I=>data_int(0),   O=>data_p(0));

data0_inv: INV       port map
(I=>data_int(0),   O=>data_n_int(0));

data0_n  : OBUF_LVDS port map
(I=>data_n_int(0), O=>data_n(0));
```

Verilog Instantiation

```
OBUF_LVDS data0_p   (.I(data_int[0]),
.O(data_p[0]));

INV       data0_inv (.I(data_int[0],
.O(data_n_int[0]);

OBUF_LVDS data0_n   (.I(data_n_int[0]),
.O(data_n[0]));
```

Location Constraints

All LVDS buffers must be explicitly placed on a device. For the output buffers this can be done with the following constraint in the .ucf or .ncf file.

```
NET data_p<0> LOC = D28; # IO_L0P

NET data_n<0> LOC = B29; # IO_L0N
```

Synchronous vs. Asynchronous Outputs

If the outputs are synchronous (registered in the IOB) then any IO_L#P|N pair can be used. If the outputs are asynchronous (no output register), then they must use one of the pairs that are part of the same IOB group at the end of a ROW or COLUMN in the device.

The LVDS pairs that can be used as asynchronous outputs are listed in the Virtex-E pinout tables. Some pairs are marked as asynchronous-capable for all devices in that package, and others are marked as available only for that device in the package. If the device size might change at some point in the product lifetime, then only the common pairs for all packages should be used.

Adding an Output Register

All LVDS buffers can have an output register in the IOB. The output registers must be in both the P-side and N-side IOBs. All the normal IOB register options are available (FD, FDE, FDC, FDCE, FDP, FDPE, FDR, FDRE, FDS, FDSE, LD, LDE, LDC, LDCE, LDP, LDPE). The register elements can be inferred or explicitly instantiated in the HDL code.

Special care must be taken to insure that the D pins of the registers are inverted and that the INIT states of the registers are opposite. The clock pin (C), clock enable (CE) and set/reset (CLR/PRE or S/R) pins must connect to the same source. Failure to do this leads to a DRC error in the software.

The register elements can be packed in the IOB using the IOB property to TRUE on the register or by using the “map -pr [i|o|b]” where “i” is inputs only, “o” is outputs only and “b” is both inputs and outputs.

To improve design coding times VHDL and Verilog synthesis macro libraries have been developed to explicitly create these structures. The output library macros are listed in Table 43. The O and OB inputs to the macros are the external net connections.

Table 43: **Output Library Macros**

Name	Inputs	Outputs
OBUFDS_FD_LVDS	D, C	O, OB
OBUFDS_FDE_LVDS	DD, CE, C	O, OB
OBUFDS_FDC_LVDS	D, C, CLR	O, OB
OBUFDS_FDCE_LVDS	D, CE, C, CLR	O, OB
OBUFDS_FDP_LVDS	D, C, PRE	O, OB
OBUFDS_FDPE_LVDS	D, CE, C, PRE	O, OB
OBUFDS_FDR_LVDS	D, C, R	O, OB
OBUFDS_FDRE_LVDS	D, CE, C, R	O, OB
OBUFDS_FDS_LVDS	D, C, S	O, OB
OBUFDS_FDSE_LVDS	D, CE, C, S	O, OB
OBUFDS_LD_LVDS	D, G	O, OB
OBUFDS_LDE_LVDS	D, GE, G	O, OB
OBUFDS_LDC_LVDS	D, G, CLR	O, OB
OBUFDS_LDCE_LVDS	D, GE, G, CLR	O, OB
OBUFDS_LDP_LVDS	D, G, PRE	O, OB
OBUFDS_LDPE_LVDS	D, GE, G, PRE	O, OB

Creating LVDS Output 3-State Buffers

LVDS output 3-state buffers can be placed in a wide number of IOB locations. The exact locations are dependent on the package used. The Virtex-E package information lists the possible locations as IO_L#P for the P-side and IO_L#N for the N-side, where # is the pair number.

HDL Instantiation

Both output 3-state buffers are required to be instantiated in the design and placed on the correct IO_L#P and IO_L#N locations. The IOB must have the same net source the following pins, clock (C), set/reset (SR), 3-state (T), 3-state clock enable (TCE), output (O), output clock enable (OCE). In addition, the output (O) pins must be inverted with respect to each other, and if output registers are used, the INIT states must be opposite values (one High and one Low). If 3-state registers are used, they must be initialized to the same state. Failure to follow these rules leads to DRC errors in the software.

VHDL Instantiation

```
data0_p:   OBUFT_LVDS port map
(I=>data_int(0), T=>data_tri,
O=>data_p(0));

data0_inv: INV port map
(I=>data_int(0), O=>data_n_int(0));

data0_n:    OBUFT_LVDS port map
(I=>data_n_int(0), T=>data_tri,
O=>data_n(0));
```

Verilog Instantiation

```
OBUFT_LVDS data0_p   (.I(data_int[0]),
.T(data_tri), .O(data_p[0]));

INV        data0_inv (.I(data_int[0],
.O(data_n_int[0]);

OBUFT_LVDS data0_n   (.I(data_n_int[0]),
.T(data_tri), .O(data_n[0]));
```

Location Constraints

All LVDS buffers must be explicitly placed on a device. For the output buffers this can be done with the following constraint in the .ucf or .ncf file.

```
NET data_p<0> LOC = D28; # IO_L0P

NET data_n<0> LOC = B29; # IO_L0N
```

Synchronous vs. Asynchronous 3-State Outputs

If the outputs are synchronous (registered in the IOB), then any IO_L#P|N pair can be used. If the outputs are asynchronous (no output register), then they must use one of the pairs that are part of the same IOB group at the end of a ROW or COLUMN in the device. This applies for either the 3-state pin or the data out pin.

LVDS pairs that can be used as asynchronous outputs are listed in the Virtex-E pinout tables. Some pairs are marked as “asynchronous capable” for all devices in that package, and others are marked as available only for that device in the package. If the device size might be changed at some point in the product lifetime, then only the common pairs for all packages should be used.

Adding Output and 3-State Registers

All LVDS buffers can have an output register in the IOB. The output registers must be in both the P-side and N-side IOBs. All the normal IOB register options are available (FD, FDE, FDC, FDCE, FDP, FDPE, FDR, FDRE, FDS, FDSE, LD, LDE, LDC, LDCE, LDP, LDPE). The register elements can be inferred or explicitly instantiated in the HDL code.

Special care must be taken to insure that the D pins of the registers are inverted and that the INIT states of the registers are opposite. The 3-state (T), 3-state clock enable (CE), clock pin (C), output clock enable (CE) and set/reset (CLR/PRE or S/R) pins must connect to the same source. Failure to do this leads to a DRC error in the software.

The register elements can be packed in the IOB using the IOB property to TRUE on the register or by using the “map -pr [i|o|b]” where “i” is inputs only, “o” is outputs only and “b” is both inputs and outputs.

To improve design coding times VHDL and Verilog synthesis macro libraries have been developed to explicitly create these structures. The input library macros are listed below. The 3-state is configured to be 3-stated at GSR and when the PRE,CLR,S or R is asserted and shares it's clock enable with the output register. If this is not desirable then the library can be updated by the user for the desired functionality. The O and OB inputs to the macros are the external net connections.

Creating a LVDS Bidirectional Buffer

LVDS bidirectional buffers can be placed in a wide number of IOB locations. The exact locations are dependent on the package used. The Virtex-E package information lists the possible locations as IO_L#P for the P-side and IO_L#N for the N-side, where # is the pair number.

HDL Instantiation

Both bidirectional buffers are required to be instantiated in the design and placed on the correct IO_L#P and IO_L#N locations. The IOB must have the same net source the following pins, clock (C), set/reset (SR), 3-state (T), 3-state clock enable (TCE), output (O), output clock enable (OCE). In addition, the output (O) pins must be inverted with respect to each other, and if output registers are used, the INIT states must be opposite values (one HIGH and one LOW). If 3-state registers are used, they must be initialized to the same state. Failure to follow these rules leads to DRC errors in the software.

VHDL Instantiation

```
data0_p:   IOBUF_LVDS port map
(I=>data_out(0), T=>data_tri,
IO=>data_p(0), O=>data_int(0));

data0_inv: INV        port map
(I=>data_out(0),   O=>data_n_out(0));

data0_n  : IOBUF_LVDS port map
(I=>data_n_out(0), T=>data_tri,
IO=>data_n(0), O=>open);
```

Verilog Instantiation

```
IOBUF_LVDS data0_p(.I(data_out[0]),
.T(data_tri), .IO(data_p[0]),
.O(data_int[0]);

INV        data0_inv (.I(data_out[0],
.O(data_n_out[0]);

IOBUF_LVDS
data0_n(.I(data_n_out[0]),.T(data_tri),.
IO(data_n[0]).O());
```

Location Constraints

All LVDS buffers must be explicitly placed on a device. For the output buffers this can be done with the following constraint in the .ucf or .ncf file.

```
NET data_p<0> LOC = D28; # IO_L0P

NET data_n<0> LOC = B29; # IO_L0N
```

Synchronous vs. Asynchronous Bidirectional Buffers

If the output side of the bidirectional buffers are synchronous (registered in the IOB), then any IO_L#P|N pair can be used. If the output side of the bidirectional buffers are asynchronous (no output register), then they must use one of the pairs that is a part of the asynchronous LVDS IOB group. This applies for either the 3-state pin or the data out pin.

The LVDS pairs that can be used as asynchronous bidirectional buffers are listed in the Virtex-E pinout tables. Some pairs are marked as asynchronous capable for all devices in that package, and others are marked as available only for that device in the package. If the device size might change at some point in the product’s lifetime, then only the common pairs for all packages should be used.

Adding Output and 3-State Registers

All LVDS buffers can have an output and input registers in the IOB. The output registers must be in both the P-side and N-side IOBs, the input register is only in the P-side. All the normal IOB register options are available (FD, FDE, FDC, FDCE, FDP, FDPE, FDR, FDRE, FDS, FDSE, LD, LDE, LDC, LDCE, LDP, LDPE). The register elements can be inferred or explicitly instantiated in the HDL code. Special care must be taken to insure that the D pins of the registers are inverted and that the INIT states of the registers are opposite. The 3-state (T), 3-state clock enable (CE), clock pin (C), output clock enable (CE), and set/reset (CLR/PRE or S/R) pins must connect to the same source. Failure to do this leads to a DRC error in the software.

The register elements can be packed in the IOB using the IOB property to TRUE on the register or by using the “map -pr [i|o|b]” where “i” is inputs only, “o” is outputs only and “b” is both inputs and outputs. To improve design coding times VHDL and Verilog synthesis macro libraries have been developed to explicitly create these structures. The bidirectional I/O library macros are listed in Table 44. The 3-state is configured to be 3-stated at GSR and when the PRE,CLR,S or R is asserted and shares its clock enable with the output and input register. If this is not desirable then the library can be updated be the user for the desired functionality. The I/O and IOB inputs to the macros are the external net connections.

Table 44: **Bidirectional I/O Library Macros**

Name	Inputs	Bidirectional	Outputs
IOBUFDS_FD_LVDS	D, T, C	IO, IOB	Q
IOBUFDS_FDE_LVDS	D, T, CE, C	IO, IOB	Q
IOBUFDS_FDC_LVDS	D, T, C, CLR	IO, IOB	Q
IOBUFDS_FDCE_LVDS	D, T, CE, C, CLR	IO, IOB	Q
IOBUFDS_FDP_LVDS	D, T, C, PRE	IO, IOB	Q
IOBUFDS_FDPE_LVDS	D, T, CE, C, PRE	IO, IOB	Q
IOBUFDS_FDR_LVDS	D, T, C, R	IO, IOB	Q
IOBUFDS_FDRE_LVDS	D, T, CE, C, R	IO, IOB	Q
IOBUFDS_FDS_LVDS	D, T, C, S	IO, IOB	Q
IOBUFDS_FDSE_LVDS	D, T, CE, C, S	IO, IOB	Q
IOBUFDS_LD_LVDS	D, T, G	IO, IOB	Q
IOBUFDS_LDE_LVDS	D, T, GE, G	IO, IOB	Q
IOBUFDS_LDC_LVDS	D, T, G, CLR	IO, IOB	Q
IOBUFDS_LDCE_LVDS	D, T, GE, G, CLR	IO, IOB	Q
IOBUFDS_LDP_LVDS	D, T, G, PRE	IO, IOB	Q
IOBUFDS_LDPE_LVDS	D, T, GE, G, PRE	IO, IOB	Q

Revision History

The following table shows the revision history for this document.

Date	Version	Revision
12/7/99	1.0	Initial Xilinx release.
1/10/00	1.1	Re-released with spd.txt v. 1.18, FG860/900/1156 package information, and additional DLL, Select RAM and SelectI/O information.
1/28/00	1.2	Added Delay Measurement Methodology table, updated SelectI/O section, Figures 30, 54, & 55, text explaining Table 5, T_{BYP} values, buffered Hex Line info, p. 8, I/O Timing Measurement notes, notes for Tables 15, 16, and corrected F1156 pinout table footnote references.
2/29/00	1.3	Updated pinout tables, V_{CC} page 20, and corrected Figure 20.
5/23/00	1.4	Correction to table on p. 22.
7/10/00	1.5	• Numerous minor edits. • Data sheet upgraded to Preliminary. • Preview -8 numbers added to **Virtex-E Electrical Characteristics** tables.
8/1/00	1.6	• Reformatted entire document to follow new style guidelines. • Changed speed grade values in tables on pages 35-37.

Date	Version	Revision
9/20/00	1.7	• Min values added to **Virtex-E Electrical Characteristics** tables. • XCV2600E and XCV3200E numbers added to **Virtex-E Electrical Characteristics** tables (Module 3). • Corrected user I/O count for XCV100E device in Table 1 (Module 1). • Changed several pins to “No Connect in the XCV100E“ and removed duplicate V_{CCINT} pins in Table ~ (Module 4). • Changed pin J10 to “No connect in XCV600E” in Table 74 (Module 4). • Changed pin J30 to “VREF option only in the XCV600E” in Table 74 (Module 4). • Corrected pair 18 in Table 75 (Module 4) to be “AO in the XCV1000E, XCV1600E“.
11/20/00	1.8	• Upgraded speed grade -8 numbers in **Virtex-E Electrical Characteristics** tables to Preliminary. • Updated minimums in Table 13 and added notes to Table 14. • Added to note 2 to **Absolute Maximum Ratings**. • Changed speed grade -8 numbers for $T_{SHCKO32}$, T_{REG}, T_{BCCS}, and T_{ICKOF}. • Changed all minimum hold times to –0.4 under **Global Clock Set-Up and Hold for LVTTL Standard, with DLL**. • Revised maximum T_{DLLPW} in -6 speed grade for **DLL Timing Parameters**. • Changed GCLK0 to BA22 for FG860 package in Table 46.
2/12/01	1.9	• Revised footnote for Table 14. • Added numbers to **Virtex-E Electrical Characteristics** tables for XCV1000E and XCV2000E devices. • Updated Table 27 and Table 78 to include values for XCV400E and XCV600E devices. • Revised Table 62 to include pinout information for the XCV400E and XCV600E devices in the BG560 package. • Updated footnotes 1 and 2 for Table 76 to include XCV2600E and XCV3200E devices.
4/02/01	2.0	• Updated numerous values in **Virtex-E Switching Characteristics** tables. • Converted data sheet to modularized format. See the **Virtex-E Data Sheet** section.
4/19/01	2.1	• Modified Figure 30 "DLL Generation of 4x Clock in Virtex-E Devices."
07/23/01	2.2	• Made minor edits to text under **Configuration**. • Added CLB column locations for XCV2600E anbd XCV3200E devices in Table 3.
11/09/01	2.3	• Added warning under **Configuration** section that attempting to load an incorrect bitstream causes configuration to fail and can damage the device.

Virtex-E Data Sheet

The Virtex-E Data Sheet contains the following modules:

- DS022-1, Virtex-E 1.8V FPGAs:
  Introduction and Ordering Information (Module 1)
- DS022-2, Virtex-E 1.8V FPGAs:
  Functional Description (Module 2)
- DS022-3, Virtex-E 1.8V FPGAs:
  DC and Switching Characteristics (Module 3)
- DS022-4, Virtex-E 1.8V FPGAs:
  Pinout Tables (Module 4)

Virtex-E Electrical Characteristics

Definition of Terms

Electrical and switching characteristics are specified on a per-speed-grade basis and can be designated as Advance, Preliminary, or Production. Each designation is defined as follows:

Advance: These speed files are based on simulations only and are typically available soon after device design specifications are frozen. Although speed grades with this designation are considered relatively stable and conservative, some under-reporting might still occur.

Preliminary: These speed files are based on complete ES (engineering sample) silicon characterization. Devices and speed grades with this designation are intended to give a better indication of the expected performance of production silicon. The probability of under-reporting delays is greatly reduced as compared to Advance data.

Production: These speed files are released once enough production silicon of a particular device family member has been characterized to provide full correlation between speed files and devices over numerous production lots. There is no under-reporting of delays, and customers receive formal notification of any subsequent changes. Typically, the slowest speed grades transition to Production before faster speed grades.

All specifications are representative of worst-case supply voltage and junction temperature conditions. The parameters included are common to popular designs and typical applications. Contact the factory for design considerations requiring more detailed information.

Table 1 correlates the current status of each Virtex-E device with a corresponding speed file designation.

Table 1: **Virtex-E Device Speed Grade Designations**

Device	Speed Grade Designations		
	Advance	Preliminary	Production
XCV50E		–8, –7, –6	
XCV100E		–8, –7, –6	
XCV200E		–8, –7, –6	
XCV300E		–8, –7, –6	
XCV400E		–8, –7, –6	
XCV600E		–8, –7, –6	
XCV1000E		–8, –7, –6	
XCV1600E		–8, –7, –6	
XCV2000E		–8, –7, –6	
XCV2600E	–8	–7, –6	
XCV3200E	–8	–7, –6	

All specifications are subject to change without notice.

© 2001 Xilinx, Inc. All rights reserved. All Xilinx trademarks, registered trademarks, patents, and disclaimers are as listed at http://www.xilinx.com/legal.htm.
All other trademarks and registered trademarks are the property of their respective owners. All specifications are subject to change without notice.

DC Characteristics

Absolute Maximum Ratings

Symbol	Description[1]			Units
V_{CCINT}	Internal Supply voltage relative to GND[2]		–0.5 to 2.0	V
V_{CCO}	Supply voltage relative to GND		–0.5 to 4.0	V
V_{REF}	Input Reference Voltage		–0.5 to 4.0	V
V_{IN}	Input voltage relative to GND		–0.5 to 4.0	V
V_{TS}	Voltage applied to 3-state output		–0.5 to 4.0	V
V_{CC}	Longest Supply Voltage Rise Time from 0 V - 1.71 V		50	ms
T_{STG}	Storage temperature (ambient)		–65 to +150	°C
T_J	Junction temperature[3]	Plastic packages	+125	°C

Notes:

1. Stresses beyond those listed under Absolute Maximum Ratings can cause permanent damage to the device. These are stress ratings only, and functional operation of the device at these or any other conditions beyond those listed under Operating Conditions is not implied. Exposure to Absolute Maximum Ratings conditions for extended periods of time can affect device reliability.
2. Xilinx recommends that all device power supplies (V_{CCINT} , V_{CCO}) be powered up simultaneously. Other power supply sequence options might result in higher than typical power-up currents.
3. For soldering guidelines and thermal considerations, see the **Device Packaging** infomation on the Xilinx website.

Recommended Operating Conditions

Symbol	Description		Min	Max	Units
V_{CCINT}	Internal Supply voltage relative to GND, T_J = 0 °C to +85 °C	Commercial	1.8 – 5%	1.8 + 5%	V
	Internal Supply voltage relative to GND, T_J = –40 °C to +100 °C	Industrial	1.8 – 5%	1.8 + 5%	V
V_{CCO}	Supply voltage relative to GND, T_J = 0 °C to +85 °C	Commercial	1.2	3.6	V
	Supply voltage relative to GND, T_J = –40 °C to +100 °C	Industrial	1.2	3.6	V
T_{IN}	Input signal transition time			250	ns

DC Characteristics Over Recommended Operating Conditions

Symbol	Description		Device	Min	Max	Units
V_{DRINT}	Data Retention V_{CCINT} Voltage (below which configuration data might be lost)		All	1.5		V
V_{DRIO}	Data Retention V_{CCO} Voltage (below which configuration data might be lost)		All	1.2		V
I_{CCINTQ}	Quiescent V_{CCINT} supply current (Note 1)		XCV50E		200	mA
			XCV100E		200	mA
			XCV200E		300	mA
			XCV300E		300	mA
			XCV400E		300	mA
			XCV600E		400	mA
			XCV1000E		500	mA
			XCV1600E		500	mA
			XCV2000E		500	mA
			XCV2600E		500	mA
			XCV3200E		500	mA
I_{CCOQ}	Quiescent V_{CCO} supply current (Note 1)		XCV50E		2	mA
			XCV100E		2	mA
			XCV200E		2	mA
			XCV300E		2	mA
			XCV400E		2	mA
			XCV600E		2	mA
			XCV1000E		2	mA
			XCV1600E		2	mA
			XCV2000E		2	mA
			XCV2600E		2	mA
			XCV3200E		2	mA
I_L	Input or output leakage current		All	–10	+10	µA
C_{IN}	Input capacitance (sample tested)	BGA, PQ, HQ, packages	All		8	pF
I_{RPU}	Pad pull-up (when selected) @ V_{in} = 0 V, V_{CCO} = 3.3 V (sample tested)		All	Note 2	0.25	mA
I_{RPD}	Pad pull-down (when selected) @ V_{in} = 3.6 V (sample tested)			Note 2	0.25	mA

Notes:
1. With no output current loads, no active input pull-up resistors, all I/O pins 3-stated and floating.
2. Internal pull-up and pull-down resistors guarantee valid logic levels at unconnected input pins. These pull-up and pull-down resistors do not guarantee valid logic levels when input pins are connected to other circuits.

Power-On Power Supply Requirements

Xilinx FPGAs require a certain amount of supply current during power-on to insure proper device operation. The actual current consumed depends on the power-on ramp rate of the power supply. This is the time required to reach the nominal power supply voltage of the device[1] from 0 V. The fastest suggested ramp rate is 0 V to nominal voltage in 2 ms and the slowest allowed ramp rate is 0 V to nominal voltage in 50 ms.

Product (Commercial Grade)	Description[2]	Current Requirement[3]
XCV50E - XCV600E	Minimum required current supply	500 mA
XCV812E - XCV2000E	Minimum required current supply	1 A
XCV2600E - XCV3200E	Minimum required current supply	1.2 A
Virtex-E Family, Industrial Grade	Minimum required current supply	2 A

Notes:
1. Ramp rate used for this specification is from 0 - 1.8 V dc. Peak current occurs on or near the internal power-on reset threshold and lasts for less than 3 ms.
2. Devices are guaranteed to initialize properly with the minimum current available from the power supply as noted above.
3. Larger currents might result if ramp rates are forced to be faster.

DC Input and Output Levels

Values for V_{IL} and V_{IH} are recommended input voltages. Values for I_{OL} and I_{OH} are guaranteed over the recommended operating conditions at the V_{OL} and V_{OH} test points. Only selected standards are tested. These are chosen to ensure that all standards meet their specifications. The selected standards are tested at minimum V_{CCO} with the respective V_{OL} and V_{OH} voltage levels shown. Other standards are sample tested.

Input/Output Standard	V_{IL}		V_{IH}		V_{OL}	V_{OH}	I_{OL}	I_{OH}
	V, Min	V, Max	V, Min	V, Max	V, Max	V, Min	mA	mA
LVTTL (Note 1)	– 0.5	0.8	2.0	3.6	0.4	2.4	24	– 24
LVCMOS2	– 0.5	0.7	1.7	2.7	0.4	1.9	12	– 12
LVCMOS18	– 0.5	35% V_{CCO}	65% V_{CCO}	1.95	0.4	V_{CCO} – 0.4	8	– 8
PCI, 3.3 V	– 0.5	30% V_{CCO}	50% V_{CCO}	V_{CCO} + 0.5	10% V_{CCO}	90% V_{CCO}	Note 2	Note 2
GTL	– 0.5	V_{REF} – 0.05	V_{REF} + 0.05	3.6	0.4	n/a	40	n/a
GTL+	– 0.5	V_{REF} – 0.1	V_{REF} + 0.1	3.6	0.6	n/a	36	n/a
HSTL I	– 0.5	V_{REF} – 0.1	V_{REF} + 0.1	3.6	0.4	V_{CCO} – 0.4	8	–8
HSTL III	– 0.5	V_{REF} – 0.1	V_{REF} + 0.1	3.6	0.4	V_{CCO} – 0.4	24	–8
HSTL IV	– 0.5	V_{REF} – 0.1	V_{REF} + 0.1	3.6	0.4	V_{CCO} – 0.4	48	–8
SSTL3 I	– 0.5	V_{REF} – 0.2	V_{REF} + 0.2	3.6	V_{REF} – 0.6	V_{REF} + 0.6	8	–8
SSTL3 II	– 0.5	V_{REF} – 0.2	V_{REF} + 0.2	3.6	V_{REF} – 0.8	V_{REF} + 0.8	16	–16
SSTL2 I	– 0.5	V_{REF} – 0.2	V_{REF} + 0.2	3.6	V_{REF} – 0.61	V_{REF} + 0.61	7.6	–7.6
SSTL2 II	– 0.5	V_{REF} – 0.2	V_{REF} + 0.2	3.6	V_{REF} – 0.80	V_{REF} + 0.80	15.2	–15.2
CTT	– 0.5	V_{REF} – 0.2	V_{REF} + 0.2	3.6	V_{REF} – 0.4	V_{REF} + 0.4	8	–8
AGP	– 0.5	V_{REF} – 0.2	V_{REF} + 0.2	3.6	10% V_{CCO}	90% V_{CCO}	Note 2	Note 2

Notes:
1. V_{OL} and V_{OH} for lower drive currents are sample tested.
2. Tested according to the relevant specifications.

LVDS DC Specifications

DC Parameter	Symbol	Conditions	Min	Typ	Max	Units
Supply Voltage	V_{CCO}		2.375	2.5	2.625	V
Output High Voltage for Q and $\overline{Q}$	V_{OH}	R_T = 100 Ω across Q and $\overline{Q}$ signals	1.25	1.425	1.6	V
Output Low Voltage for Q and $\overline{Q}$	V_{OL}	R_T = 100 Ω across Q and $\overline{Q}$ signals	0.9	1.075	1.25	V
Differential Output Voltage (Q – $\overline{Q}$), Q = High ($\overline{Q}$ – Q), $\overline{Q}$ = High	V_{ODIFF}	R_T = 100 Ω across Q and $\overline{Q}$ signals	250	350	450	mV
Output Common-Mode Voltage	V_{OCM}	R_T = 100 Ω across Q and $\overline{Q}$ signals	1.125	1.25	1.375	V
Differential Input Voltage (Q – $\overline{Q}$), Q = High ($\overline{Q}$ – Q), $\overline{Q}$ = High	V_{IDIFF}	Common-mode input voltage = 1.25 V	100	350	NA	mV
Input Common-Mode Voltage	V_{ICM}	Differential input voltage = ±350 mV	0.2	1.25	2.2	V

Note: Refer to the Design Consideration section for termination schematics.

LVPECL DC Specifications

These values are valid at the output of the source termination pack shown under **LVPECL**, with a 100 Ω differential load only. The V_{OH} levels are 200 mV below standard LVPECL levels and are compatible with devices tolerant of lower common-mode ranges. The following table summarizes the DC output specifications of LVPECL.

DC Parameter	Min	Max	Min	Max	Min	Max	Units
V_{CCO}	**3.0**		**3.3**		**3.6**		**V**
V_{OH}	1.8	2.11	1.92	2.28	2.13	2.41	V
V_{OL}	0.96	1.27	1.06	1.43	1.30	1.57	V
V_{IH}	1.49	2.72	1.49	2.72	1.49	2.72	V
V_{IL}	0.86	2.125	0.86	2.125	0.86	2.125	V
Differential Input Voltage	0.3	-	0.3	-	0.3	-	V

Virtex-E Switching Characteristics

Testing of switching parameters is modeled after testing methods specified by MIL-M-38510/605. All devices are 100% functionally tested. Internal timing parameters are derived from measuring internal test patterns. Listed below are representative values. For more specific, more precise, and worst-case guaranteed data, use the values reported by the static timing analyzer (TRCE in the Xilinx Development System) and back-annotated to the simulation net list. All timing parameters assume worst-case operating conditions (supply voltage and junction temperature). Values apply to all Virtex-E devices unless otherwise noted.

IOB Input Switching Characteristics

Input delays associated with the pad are specified for LVTTL levels in Table 2. For other standards, adjust the delays with the values shown in **IOB Input Switching Characteristics Standard Adjustments**, page 8.

Table 2: **IOB Input Switching Characteristics**

			Speed Grade[1]				
Description[2]	**Symbol**	**Device**	**Min[3]**	**-8**	**-7**	**-6**	**Units**
Propagation Delays							
Pad to I output, no delay	T_{IOPI}	All	0.43	0.8	0.8	0.8	ns, max
Pad to I output, with delay	T_{IOPID}	XCV50E	0.51	1.0	1.0	1.0	ns, max
		XCV100E	0.51	1.0	1.0	1.0	ns, max
		XCV200E	0.51	1.0	1.0	1.0	ns, max
		XCV300E	0.51	1.0	1.0	1.0	ns, max
		XCV400E	0.51	1.0	1.0	1.0	ns, max
		XCV600E	0.51	1.0	1.0	1.0	ns, max
		XCV1000E	0.55	1.1	1.1	1.1	ns, max
		XCV1600E	0.55	1.1	1.1	1.1	ns, max
		XCV2000E	0.55	1.1	1.1	1.1	ns, max
		XCV2600E[4]	0.55	1.1	1.1	1.1	ns, max
		XCV3200E[4]	0.55	1.1	1.1	1.1	ns, max
Pad to output IQ via transparent latch, no delay	T_{IOPLI}	All	0.8	1.4	1.5	1.6	ns, max
Pad to output IQ via transparent latch, with delay	T_{IOPLID}	XCV50E	1.31	2.9	3.0	3.1	ns, max
		XCV100E	1.31	2.9	3.0	3.1	ns, max
		XCV200E	1.39	3.1	3.2	3.3	ns, max
		XCV300E	1.39	3.1	3.2	3.3	ns, max
		XCV400E	1.43	3.2	3.3	3.4	ns, max
		XCV600E	1.55	3.5	3.6	3.7	ns, max
		XCV1000E	1.55	3.5	3.6	3.7	ns, max
		XCV1600E	1.59	3.6	3.7	3.8	ns, max
		XCV2000E	1.59	3.6	3.7	3.8	ns, max
		XCV2600E[4]	1.59	3.6	3.7	3.8	ns, max
		XCV3200E[4]	1.59	3.6	3.7	3.8	ns, max

Table 2: **IOB Input Switching Characteristics** ***(Continued)***

			Speed Grade[1]				
Description[2]	**Symbol**	**Device**	**Min[3]**	**-8**	**-7**	**-6**	**Units**
Sequential Delays							
Clock CLK to output IQ	T_{IOCKIQ}	All	0.18	0.4	0.7	0.7	ns, max
Setup and Hold Times with respect to Clock at IOB Input Register							
Pad, no delay	T_{IOPICK}/ T_{IOICKP}	All	0.69 / 0	1.3 / 0	1.4 / 0	1.5 / 0	ns, min
Pad, with delay	$T_{IOPICKD}$/ $T_{IOICKPD}$	XCV50E	1.25 / 0	2.8 / 0	2.9 / 0	2.9 / 0	ns, min
		XCV100E	1.25 / 0	2.8 / 0	2.9 / 0	2.9 / 0	ns, min
		XCV200E	1.33 / 0	3.0 / 0	3.1 / 0	3.1 / 0	ns, min
		XCV300E	1.33 / 0	3.0 / 0	3.1 / 0	3.1 / 0	ns, min
		XCV400E	1.37 / 0	3.1 / 0	3.2 / 0	3.2 / 0	ns, min
		XCV600E	1.49 / 0	3.4 / 0	3.5 / 0	3.5 / 0	ns, min
		XCV1000E	1.49 / 0	3.4 / 0	3.5 / 0	3.5 / 0	ns, min
		XCV1600E	1.53 / 0	3.5 / 0	3.6 / 0	3.6 / 0	ns, min
		XCV2000E	1.53 / 0	3.5 / 0	3.6 / 0	3.6 / 0	ns, min
		XCV2600E[4]	1.53 / 0	3.5 / 0	3.6 / 0	3.6 / 0	ns, min
		XCV3200E[4]	1.53 / 0	3.5 / 0	3.6 / 0	3.6 / 0	ns, min
ICE input	$T_{IOICECK}$/ $T_{IOCKICE}$	All	0.28 / 0.0	0.55 / 0.01	0.7 / 0.01	0.7 / 0.01	ns, min
SR input (IFF, synchronous)	$T_{IOSRCKI}$	All	0.38	0.8	0.9	1.0	ns, min
Set/Reset Delays							
SR input to IQ (asynchronous)	T_{IOSRIQ}	All	0.54	1.1	1.2	1.4	ns, max
GSR to output IQ	T_{GSRQ}	All	3.88	7.6	8.5	9.7	ns, max

Notes:
1. A Zero "0" Hold Time listing indicates no hold time or a negative hold time. Negative values can not be guaranteed "best-case", but if a "0" is listed, there is no positive hold time.
2. Input timing i for LVTTL is measured at 1.4 V. For other I/O standards, see Table 4.
3. The numbers for Min are **Advance** specification numbers. See **Definition of Terms**, page 1 for a description.
4. The numbers for XCV2600E and XCV3200E devices are **Preview** specification numbers for all speed grades.

IOB Input Switching Characteristics Standard Adjustments

Description	Symbol	Standard	Speed Grade[1] Min[2]	-8	-7	-6	Units
Data Input Delay Adjustments							
Standard-specific data input delay adjustments	T_{ILVTTL}	LVTTL	0.0	0.0	0.0	0.0	ns
	$T_{ILVCMOS2}$	LVCMOS2	–0.02	0.0	0.0	0.0	ns
	$T_{ILVCMOS18}$	LVCMOS18	0.12	+0.20	+0.20	+0.20	ns
	T_{ILVDS}	LVDS	0.00	+0.15	+0.15	+0.15	ns
	$T_{ILVPECL}$	LVPECL	0.00	+0.15	+0.15	+0.15	ns
	T_{IPCI33_3}	PCI, 33 MHz, 3.3 V	–0.05	+0.08	+0.08	+0.08	ns
	T_{IPCI66_3}	PCI, 66 MHz, 3.3 V	–0.05	–0.11	–0.11	–0.11	ns
	T_{IGTL}	GTL	+0.10	+0.14	+0.14	+0.14	ns
	$T_{IGTLPLUS}$	GTL+	+0.06	+0.14	+0.14	+0.14	ns
	T_{IHSTL}	HSTL	+0.02	+0.04	+0.04	+0.04	ns
	T_{ISSTL2}	SSTL2	–0.04	+0.04	+0.04	+0.04	ns
	T_{ISSTL3}	SSTL3	–0.02	+0.04	+0.04	+0.04	ns
	T_{ICTT}	CTT	+0.01	+0.10	+0.10	+0.10	ns
	T_{IAGP}	AGP	–0.03	+0.04	+0.04	+0.04	ns

Notes:
1. Input timing i for LVTTL is measured at 1.4 V. For other I/O standards, see Table 4.
2. The numbers for Min are **Advance** product specification numbers. See **Definition of Terms**, page 1 for a description.

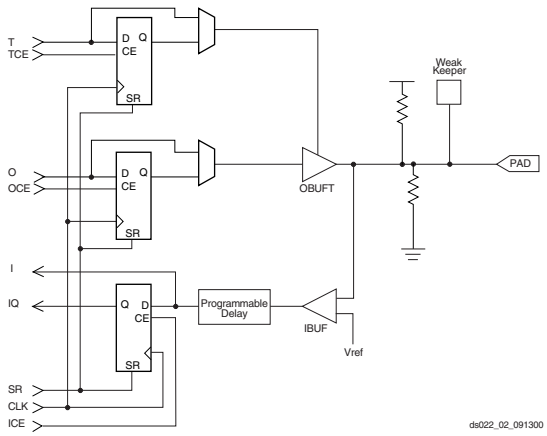

Figure 1: **Virtex-E Input/Output Block (IOB)**

IOB Output Switching Characteristics, Figure 1

Output delays terminating at a pad are specified for LVTTL with 12 mA drive and fast slew rate. For other standards, adjust the delays with the values shown in **IOB Output Switching Characteristics Standard Adjustments**, page 10.

		Speed Grade(1)				
Description(2)	**Symbol**	**Min(3)**	**-8**	**-7**	**-6**	**Units**
Propagation Delays						
O input to Pad	T_{IOOP}	1.04	2.5	2.7	2.9	ns, max
O input to Pad via transparent latch	T_{IOOLP}	1.24	2.9	3.1	3.4	ns, max
3-State Delays						
T input to Pad high-impedance (Note 2)	T_{IOTHZ}	0.73	1.5	1.7	1.9	ns, max
T input to valid data on Pad	T_{IOTON}	1.13	2.7	2.9	3.1	ns, max
T input to Pad high-impedance via transparent latch (Note 2)	$T_{IOTLPHZ}$	0.86	1.8	2.0	2.2	ns, max
T input to valid data on Pad via transparent latch	$T_{IOTLPON}$	1.26	3.0	3.2	3.4	ns, max
GTS to Pad high impedance (Note 2)	T_{GTS}	1.94	4.1	4.6	4.9	ns, max
Sequential Delays						
Clock CLK to Pad	T_{IOCKP}	0.97	2.4	2.8	2.9	ns, max
Clock CLK to Pad high-impedance (synchronous) (Note 2)	T_{IOCKHZ}	0.77	1.6	2.0	2.2	ns, max
Clock CLK to valid data on Pad (synchronous)	T_{IOCKON}	1.17	2.8	3.2	3.4	ns, max
Setup and Hold Times before/after Clock CLK						
O input	T_{IOOCK} / T_{IOCKO}	0.43 / 0	0.9 / 0	1.0 / 0	1.1 / 0	ns, min
OCE input	$T_{IOOCECK}$ / $T_{IOCKOCE}$	0.28 / 0	0.55 / 0.01	0.7 / 0	0.7 / 0	ns, min
SR input (OFF)	$T_{IOSRCKO}$ / $T_{IOCKOSR}$	0.40 / 0	0.8 / 0	0.9 / 0	1.0 / 0	ns, min
3-State Setup Times, T input	T_{IOTCK} / T_{IOCKT}	0.26 / 0	0.51 / 0	0.6 / 0	0.7 / 0	ns, min
3-State Setup Times, TCE input	$T_{IOTCECK}$ / $T_{IOCKTCE}$	0.30 / 0	0.6 / 0	0.7 / 0	0.8 / 0	ns, min
3-State Setup Times, SR input (TFF)	$T_{IOSRCKT}$ / $T_{IOCKTSR}$	0.38 / 0	0.8 / 0	0.9 / 0	1.0 / 0	ns, min
Set/Reset Delays						
SR input to Pad (asynchronous)	T_{IOSRP}	1.30	3.1	3.3	3.5	ns, max
SR input to Pad high-impedance (asynchronous) (Note 2)	T_{IOSRHZ}	1.08	2.2	2.4	2.7	ns, max
SR input to valid data on Pad (asynchronous)	T_{IOSRON}	1.48	3.4	3.7	3.9	ns, max
GSR to Pad	T_{IOGSRQ}	3.88	7.6	8.5	9.7	ns, max

Notes:
1. A Zero “0” Hold Time listing indicates no hold time or a negative hold time. Negative values can not be guaranteed “best-case”, but if a “0” is listed, there is no positive hold time.
2. 3-state turn-off delays should not be adjusted.
3. The numbers for Min are Advance product specification numbers. See **Definition of Terms**, page 1 for a description.

IOB Output Switching Characteristics Standard Adjustments

Output delays terminating at a pad are specified for LVTTL with 12 mA drive and fast slew rate. For other standards, adjust the delays by the values shown.

			Speed Grade				
Description	**Symbol**	**Standard**	**Min[1]**	**-8**	**-7**	**-6**	**Units**
Output Delay Adjustments							
Standard-specific adjustments for output delays terminating at pads (based on standard capacitive load, Csl)	T_{OLVTTL_S2}	LVTTL, Slow, 2 mA	4.2	+14.7	+14.7	+14.7	ns
	T_{OLVTTL_S4}	4 mA	2.5	+7.5	+7.5	+7.5	ns
	T_{OLVTTL_S6}	6 mA	1.8	+4.8	+4.8	+4.8	ns
	T_{OLVTTL_S8}	8 mA	1.2	+3.0	+3.0	+3.0	ns
	T_{OLVTTL_S12}	12 mA	1.0	+1.9	+1.9	+1.9	ns
	T_{OLVTTL_S16}	16 mA	0.9	+1.7	+1.7	+1.7	ns
	T_{OLVTTL_S24}	24 mA	0.8	+1.3	+1.3	+1.3	ns
	T_{OLVTTL_F2}	LVTTL, Fast, 2 mA	1.9	+13.1	+13.1	+13.1	ns
	T_{OLVTTL_F4}	4 mA	0.7	+5.3	+5.3	+5.3	ns
	T_{OLVTTL_F6}	6 mA	0.20	+3.1	+3.1	+3.1	ns
	T_{OLVTTL_F8}	8 mA	0.10	+1.0	+1.0	+1.0	ns
	T_{OLVTTL_F12}	12 mA	0.0	0.0	0.0	0.0	ns
	T_{OLVTTL_F16}	16 mA	–0.10	–0.05	–0.05	–0.05	ns
	T_{OLVTTL_F24}	24 mA	–0.10	–0.20	–0.20	–0.20	ns
	$T_{OLVCMOS_2}$	LVCMOS2	0.10	+0.09	+0.09	+0.09	ns
	$T_{OLVCMOS_18}$	LVCMOS18	0.10	+0.7	+0.7	+0.7	ns
	T_{OLVDS}	LVDS	–0.39	–1.2	–1.2	–1.2	ns
	$T_{OLVPECL}$	LVPECL	–0.20	–0.41	–0.41	–0.41	ns
	T_{OPCI33_3}	PCI, 33 MHz, 3.3 V	0.50	+2.3	+2.3	+2.3	ns
	T_{OPCI66_3}	PCI, 66 MHz, 3.3 V	0.10	–0.41	–0.41	–0.41	ns
	T_{OGTL}	GTL	0.6	+0.49	+0.49	+0.49	ns
	T_{OGTLP}	GTL+	0.7	+0.8	+0.8	+0.8	ns
	T_{OHSTL_I}	HSTL I	0.10	–0.51	–0.51	–0.51	ns
	T_{OHSTL_III}	HSTL III	–0.10	–0.91	–0.91	–0.91	ns
	T_{OHSTL_IV}	HSTL IV	–0.20	–1.01	–1.01	–1.01	ns
	T_{OSSTL2_I}	SSTL2 I	–0.10	–0.51	–0.51	–0.51	ns
	T_{OSSTL2_II}	SSTL2 II	–0.20	–0.91	–0.91	–0.91	ns
	T_{OSSTL3_I}	SSTL3 I	–0.20	–0.51	–0.51	–0.51	ns
	T_{OSSTL3_II}	SSTL3 II	–0.30	–1.01	–1.01	–1.01	ns
	T_{OCTT}	CTT	0.0	–0.61	–0.61	–0.61	ns
	T_{OAGP}	AGP	–0.1	–0.91	–0.91	–0.91	ns

Notes:

1. The numbers for Min are Advance product specification numbers. See **Definition of Terms**, page 1 for a description.

Calculation of T_{ioop} as a Function of Capacitance

T_{ioop} is the propagation delay from the O Input of the IOB to the pad. The values for T_{ioop} are based on the standard capacitive load (C_{sl}) for each I/O standard as listed in Table 3.

Table 3: **Constants for Use in Calculation of T_{ioop}**

Standard	Csl (pF)	fl (ns/pF)
LVTTL Fast Slew Rate, 2mA drive	35	0.41
LVTTL Fast Slew Rate, 4mA drive	35	0.20
LVTTL Fast Slew Rate, 6mA drive	35	0.13
LVTTL Fast Slew Rate, 8mA drive	35	0.079
LVTTL Fast Slew Rate, 12mA drive	35	0.044
LVTTL Fast Slew Rate, 16mA drive	35	0.043
LVTTL Fast Slew Rate, 24mA drive	35	0.033
LVTTL Slow Slew Rate, 2mA drive	35	0.41
LVTTL Slow Slew Rate, 4mA drive	35	0.20
LVTTL Slow Slew Rate, 6mA drive	35	0.10
LVTTL Slow Slew Rate, 8mA drive	35	0.086
LVTTL Slow Slew Rate, 12mA drive	35	0.058
LVTTL Slow Slew Rate, 16mA drive	35	0.050
LVTTL Slow Slew Rate, 24mA drive	35	0.048
LVCMOS2	35	0.041
LVCMOS18	35	0.050
PCI 33 MHZ 3.3 V	10	0.050
PCI 66 MHz 3.3 V	10	0.033
GTL	0	0.014
GTL+	0	0.017
HSTL Class I	20	0.022
HSTL Class III	20	0.016
HSTL Class IV	20	0.014
SSTL2 Class I	30	0.028
SSTL2 Class II	30	0.016
SSTL3 Class I	30	0.029
SSTL3 Class II	30	0.016
CTT	20	0.035
AGP	10	0.037

Notes:
1. I/O parameter measurements are made with the capacitance values shown above. See the **Application Examples** (Module 2) for appropriate terminations.
2. I/O standard measurements are reflected in the IBIS model information except where the IBIS format precludes it.

For other capacitive loads, use the formulas below to calculate the corresponding T_{ioop}:

$$T_{ioop} = T_{ioop} + T_{opadjust} + (C_{load} - C_{sl}) * fl$$

where:

$T_{opadjust}$ is reported above in the Output Delay Adjustment section.

C_{load} is the capacitive load for the design.

Table 4: **Delay Measurement Methodology**

Standard	V_L[1]	V_H[1]	Meas. Point	V_{REF} (Typ)[2]
LVTTL	0	3	1.4	-
LVCMOS2	0	2.5	1.125	-
PCI33_3	Per PCI Spec			-
PCI66_3	Per PCI Spec			-
GTL	V_{REF} –0.2	V_{REF} +0.2	V_{REF}	0.80
GTL+	V_{REF} –0.2	V_{REF} +0.2	V_{REF}	1.0
HSTL Class I	V_{REF} –0.5	V_{REF} +0.5	V_{REF}	0.75
HSTL Class III	V_{REF} –0.5	V_{REF} +0.5	V_{REF}	0.90
HSTL Class IV	V_{REF} –0.5	V_{REF} +0.5	V_{REF}	0.90
SSTL3 I & II	V_{REF} –1.0	V_{REF} +1.0	V_{REF}	1.5
SSTL2 I & II	V_{REF} –0.75	V_{REF} +0.75	V_{REF}	1.25
CTT	V_{REF} –0.2	V_{REF} +0.2	V_{REF}	1.5
AGP	V_{REF} – (0.2xV_{CCO})	V_{REF} + (0.2xV_{CCO})	V_{REF}	Per AGP Spec
LVDS	1.2 –0.125	1.2 + 0.125	1.2	
LVPECL	1.6 –0.3	1.6 + 0.3	1.6	

Notes:
1. Input waveform switches between V_L and V_H.
2. Measurements are made at V_{REF} (Typ), Maximum, and Minimum. Worst-case values are reported.

   I/O parameter measurements are made with the capacitance values shown in Table 14. See the **Application Examples** (Module 2) for appropriate terminations.

   I/O standard measurements are reflected in the IBIS model information except where the IBIS format precludes it.

Clock Distribution Switching Characteristics

Description	Symbol	Speed Grade				Units
		Min[1]	-8	-7	-6	
GCLK IOB and Buffer						
Global Clock PAD to output.	T_{GPIO}	0.38	0.7	0.7	0.7	ns, max
Global Clock Buffer I input to O output	T_{GIO}	0.11	0.20	0.45	0.50	ns, max

Notes:
1. The numbers for Min are **Advance** product specification numbers. See **Definition of Terms**, page 1 for a description.

I/O Standard Global Clock Input Adjustments

Description	Symbol[1]	Standard	Speed Grade				Units
			Min[2]	-8	-7	-6	
Data Input Delay Adjustments							
Standard-specific global clock input delay adjustments	$T_{GPLVTTL}$	LVTTL	0.0	0.0	0.0	0.0	ns, max
	$T_{GPLVCMOS2}$	LVCMOS2	–0.02	0.0	0.0	0.0	ns, max
	$T_{GPLVCMOS18}$	LVCMOS18	0.12	0.20	0.20	0.20	ns, max
	T_{GLVDS}	LVDS	0.23	0.38	0.38	0.38	ns, max
	$T_{GLVPECL}$	LVPECL	0.23	0.38	0.38	0.38	ns, max
	$T_{GPPCI33_3}$	PCI, 33 MHz, 3.3 V	–0.05	0.08	0.08	0.08	ns, max
	$T_{GPPCI66_3}$	PCI, 66 MHz, 3.3 V	–0.05	–0.11	–0.11	–0.11	ns, max
	T_{GPGTL}	GTL	0.20	0.37	0.37	0.37	ns, max
	T_{GPGTLP}	GTL+	0.20	0.37	0.37	0.37	ns, max
	T_{GPHSTL}	HSTL	0.18	0.27	0.27	0.27	ns, max
	$T_{GPSSTL2}$	SSTL2	0.21	0.27	0.27	0.27	ns, max
	$T_{GPSSTL3}$	SSTL3	0.18	0.27	0.27	0.27	ns, max
	T_{GPCTT}	CTT	0.22	0.33	0.33	0.33	ns, max
	T_{GPAGP}	AGP	0.21	0.27	0.27	0.27	ns, max

Notes:
1. Input timing for GPLVTTL is measured at 1.4 V. For other I/O standards, see Table 4.
2. The numbers for Min are **Advance** product specification numbers. See **Definition of Terms**, page 1 for a description.

CLB Switching Characteristics

Delays originating at F/G inputs vary slightly according to the input used, see Figure 2. The values listed below are worst-case. Precise values are provided by the timing analyzer.

		Speed Grade(1)				
Description	**Symbol**	**Min(2)**	**-8**	**-7**	**-6**	**Units**
Combinatorial Delays						
4-input function: F/G inputs to X/Y outputs	T_{ILO}	0.19	0.40	0.42	0.47	ns, max
5-input function: F/G inputs to F5 output	T_{IF5}	0.36	0.76	0.8	0.9	ns, max
5-input function: F/G inputs to X output	T_{IF5X}	0.35	0.74	0.8	0.9	ns, max
6-input function: F/G inputs to Y output via F6 MUX	T_{IF6Y}	0.35	0.74	0.9	1.0	ns, max
6-input function: F5IN input to Y output	T_{F5INY}	0.04	0.11	0.20	0.22	ns, max
Incremental delay routing through transparent latch to XQ/YQ outputs	T_{IFNCTL}	0.27	0.63	0.7	0.8	ns, max
BY input to YB output	T_{BYYB}	0.19	0.38	0.46	0.51	ns, max
Sequential Delays						
FF Clock CLK to XQ/YQ outputs	T_{CKO}	0.34	0.87	0.9	1.0	ns, max
Latch Clock CLK to XQ/YQ outputs	T_{CKLO}	0.40	0.87	0.9	1.0	ns, max
Setup and Hold Times before/after Clock CLK						
4-input function: F/G Inputs	T_{ICK} / T_{CKI}	0.39 / 0	0.9 / 0	1.0 / 0	1.1 / 0	ns, min
5-input function: F/G inputs	T_{IF5CK} / T_{CKIF5}	0.55 / 0	1.3 / 0	1.4 / 0	1.5 / 0	ns, min
6-input function: F5IN input	T_{F5INCK} / T_{CKF5IN}	0.27 / 0	0.6 / 0	0.8 / 0	0.8 / 0	ns, min
6-input function: F/G inputs via F6 MUX	T_{IF6CK} / T_{CKIF6}	0.58 / 0	1.3 / 0	1.5 / 0	1.6 / 0	ns, min
BX/BY inputs	T_{DICK} / T_{CKDI}	0.25 / 0	0.6 / 0	0.7 / 0	0.8 / 0	ns, min
CE input	T_{CECK} / T_{CKCE}	0.28 / 0	0.55 / 0	0.7 / 0	0.7 / 0	ns, min
SR/BY inputs (synchronous)	T_{RCK} / T_{CKR}	0.24 / 0	0.46 / 0	0.52 / 0	0.6 / 0	ns, min
Clock CLK						
Minimum Pulse Width, High	T_{CH}	0.56	1.2	1.3	1.4	ns, min
Minimum Pulse Width, Low	T_{CL}	0.56	1.2	1.3	1.4	ns, min
Set/Reset						
Minimum Pulse Width, SR/BY inputs	T_{RPW}	0.94	1.9	2.1	2.4	ns, min
Delay from SR/BY inputs to XQ/YQ outputs (asynchronous)	T_{RQ}	0.39	0.8	0.9	1.0	ns, max
Toggle Frequency (MHz) (for export control)	F_{TOG}	-	416	400	357.2	MHz

Notes:
1. A Zero “0” Hold Time listing indicates no hold time or a negative hold time. Negative values can not be guaranteed “best-case”, but if a “0” is listed, there is no positive hold time.
2. The numbers for Min are **Advance** product specification numbers. See **Definition of Terms**, page 1 for a description.

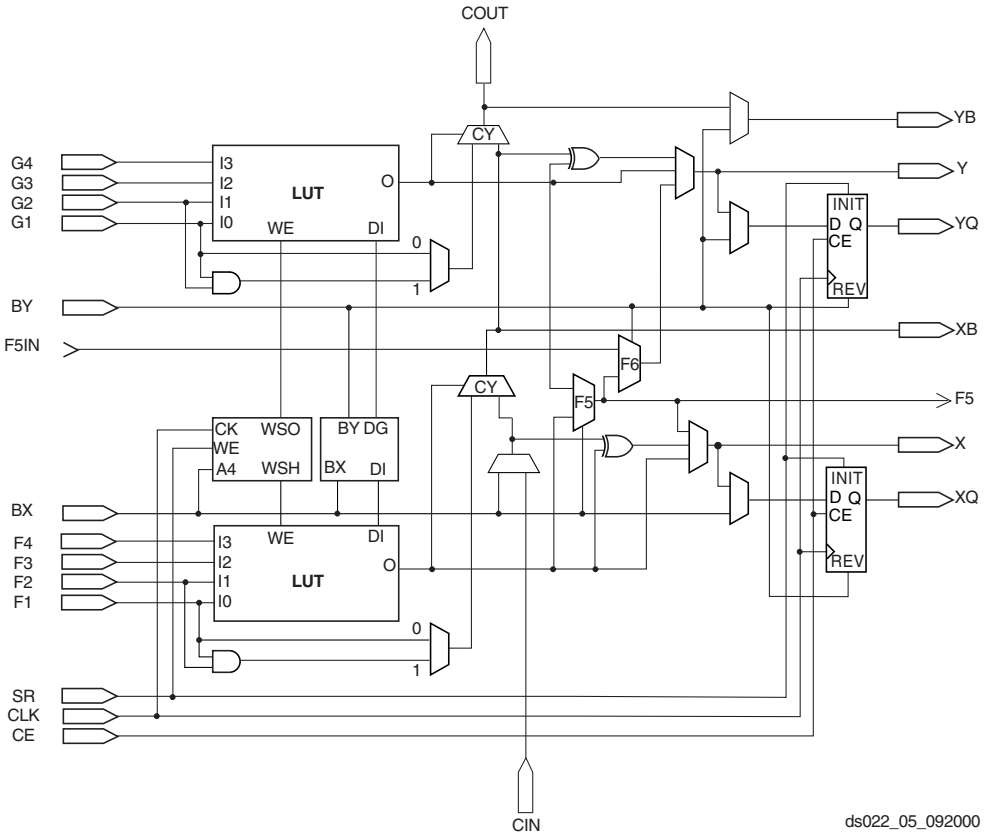

Figure 2: **Detailed View of Virtex-E Slice**

CLB Arithmetic Switching Characteristics

Setup times not listed explicitly can be approximated by decreasing the combinatorial delays by the setup time adjustment listed. Precise values are provided by the timing analyzer.

		Speed Grade[1]				
Description	**Symbol**	**Min[2]**	**-8**	**-7**	**-6**	**Units**
Combinatorial Delays						
F operand inputs to X via XOR	T_{OPX}	0.32	0.68	0.8	0.8	ns, max
F operand input to XB output	T_{OPXB}	0.35	0.65	0.8	0.9	ns, max
F operand input to Y via XOR	T_{OPY}	0.59	1.06	1.4	1.5	ns, max
F operand input to YB output	T_{OPYB}	0.48	0.89	1.1	1.3	ns, max
F operand input to COUT output	T_{OPCYF}	0.37	0.71	0.9	1.0	ns, max
G operand inputs to Y via XOR	T_{OPGY}	0.34	0.72	0.8	0.9	ns, max
G operand input to YB output	T_{OPGYB}	0.47	0.78	1.2	1.3	ns, max
G operand input to COUT output	T_{OPCYG}	0.36	0.60	0.9	1.0	ns, max
BX initialization input to COUT	T_{BXCY}	0.19	0.36	0.51	0.57	ns, max
CIN input to X output via XOR	T_{CINX}	0.27	0.50	0.6	0.7	ns, max
CIN input to XB	T_{CINXB}	0.02	0.03	0.07	0.08	ns, max
CIN input to Y via XOR	T_{CINY}	0.26	0.45	0.7	0.7	ns, max
CIN input to YB	T_{CINYB}	0.16	0.28	0.38	0.43	ns, max
CIN input to COUT output	T_{BYP}	0.05	0.10	0.14	0.15	ns, max
Multiplier Operation						
F1/2 operand inputs to XB output via AND	T_{FANDXB}	0.10	0.30	0.35	0.39	ns, max
F1/2 operand inputs to YB output via AND	T_{FANDYB}	0.28	0.56	0.7	0.8	ns, max
F1/2 operand inputs to COUT output via AND	T_{FANDCY}	0.17	0.38	0.46	0.51	ns, max
G1/2 operand inputs to YB output via AND	T_{GANDYB}	0.20	0.46	0.55	0.7	ns, max
G1/2 operand inputs to COUT output via AND	T_{GANDCY}	0.09	0.28	0.30	0.34	ns, max
Setup and Hold Times before/after Clock CLK						
CIN input to FFX	T_{CCKX}/T_{CKCX}	0.47 / 0	1.0 / 0	1.2 / 0	1.3 / 0	ns, min
CIN input to FFY	T_{CCKY}/T_{CKCY}	0.49 / 0	0.92 / 0	1.2 / 0	1.3 / 0	ns, min

Notes:
1. A Zero “0” Hold Time listing indicates no hold time or a negative hold time. Negative values can not be guaranteed “best-case”, but if a “0” is listed, there is no positive hold time.
2. The numbers for Min are **Advance** product specification numbers. See **Definition of Terms**, page 1 for a description.

CLB Distributed RAM Switching Characteristics

Description	Symbol	Speed Grade[1] Min[2]	-8	-7	-6	Units
Sequential Delays						
Clock CLK to X/Y outputs (WE active) 16 x 1 mode	$T_{SHCKO16}$	0.67	1.48	1.5	1.7	ns, max
Clock CLK to X/Y outputs (WE active) 32 x 1 mode	$T_{SHCKO32}$	0.84	1.76	1.9	2.1	ns, max
Shift-Register Mode						
Clock CLK to X/Y outputs	T_{REG}	1.25	2.49	2.9	3.2	ns, max
Setup and Hold Times before/after Clock CLK						
F/G address inputs	T_{AS}/T_{AH}	0.19 / 0	0.38 / 0	0.42 / 0	0.47 / 0	ns, min
BX/BY data inputs (DIN)	T_{DS}/T_{DH}	0.24 / 0	0.47 / 0	0.53 / 0	0.6 / 0	ns, min
CE input (WE)	T_{WS}/T_{WH}	0.29 / 0	0.57 / 0	0.7 / 0	0.8 / 0	ns, min
Shift-Register Mode						
BX/BY data inputs (DIN)	T_{SHDICK}	0.24 / 0	0.47 / 0	0.53 / 0	0.6 / 0	ns, min
CE input (WS)	T_{SHCECK}	0.29 / 0	0.57 / 0	0.7 / 0	0.8 / 0	ns, min
Clock CLK						
Minimum Pulse Width, High	T_{WPH}	0.96	1.9	2.1	2.4	ns, min
Minimum Pulse Width, Low	T_{WPL}	0.96	1.9	2.1	2.4	ns, min
Minimum clock period to meet address write cycle time	T_{WC}	1.92	3.8	4.2	4.8	ns, min
Shift-Register Mode						
Minimum Pulse Width, High	T_{SRPH}	1.0	1.9	2.1	2.4	ns, min
Minimum Pulse Width, Low	T_{SRPL}	1.0	1.9	2.1	2.4	ns, min

Notes:
1. A Zero “0” Hold Time listing indicates no hold time or a negative hold time. Negative values can not be guaranteed “best-case”, but if a “0” is listed, there is no positive hold time.
2. The numbers for Min are **Advance** product specification numbers. See **Definition of Terms**, page 1 for a description.

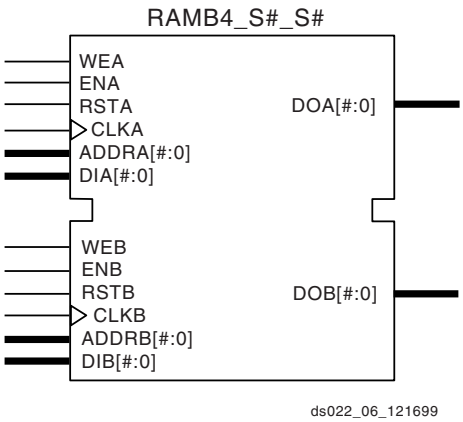

Figure 3: **Dual-Port Block SelectRAM**

Block RAM Switching Characteristics

Description	Symbol	Speed Grade[1]				Units
		Min[2]	-8	-7	-6	
Sequential Delays						
Clock CLK to DOUT output	T_{BCKO}	0.63	2.46	3.1	3.5	ns, max
Setup and Hold Times before Clock CLK						
ADDR inputs	T_{BACK}/T_{BCKA}	0.42 / 0	0.9 / 0	1.0 / 0	1.1 / 0	ns, min
DIN inputs	T_{BDCK}/T_{BCKD}	0.42 / 0	0.9 / 0	1.0 / 0	1.1 / 0	ns, min
EN input	T_{BECK}/T_{BCKE}	0.97 / 0	2.0 / 0	2.2 / 0	2.5 / 0	ns, min
RST input	T_{BRCK}/T_{BCKR}	0.9 / 0	1.8 / 0	2.1 / 0	2.3 / 0	ns, min
WEN input	T_{BWCK}/T_{BCKW}	0.86 / 0	1.7 / 0	2.0 / 0	2.2 / 0	ns, min
Clock CLK						
Minimum Pulse Width, High	T_{BPWH}	0.6	1.2	1.35	1.5	ns, min
Minimum Pulse Width, Low	T_{BPWL}	0.6	1.2	1.35	1.5	ns, min
CLKA -> CLKB setup time for different ports	T_{BCCS}	1.2	2.4	2.7	3.0	ns, min

Notes:
1. A Zero “0” Hold Time listing indicates no hold time or a negative hold time. Negative values can not be guaranteed “best-case”, but if a “0” is listed, there is no positive hold time.
2. The numbers for Min are **Advance** product specification numbers. See **Definition of Terms**, page 1 for a description.

TBUF Switching Characteristics

Description	Symbol	Speed Grade				Units
		Min[1]	-8	-7	-6	
Combinatorial Delays						
IN input to OUT output	T_{IO}	0.0	0.0	0.0	0 .0	ns, max
TRI input to OUT output high-impedance	T_{OFF}	0.05	0.092	0.10	0.11	ns, max
TRI input to valid data on OUT output	T_{ON}	0.05	0.092	0.10	0.11	ns, max

Notes:
1. The numbers for Min are **Advance** product specification numbers. See **Definition of Terms**, page 1 for a description.

JTAG Test Access Port Switching Characteristics

Description	Symbol	Value	Units
TMS and TDI Setup times before TCK	T_{TAPTK}	4.0	ns, min
TMS and TDI Hold times after TCK	T_{TCKTAP}	2.0	ns, min
Output delay from clock TCK to output TDO	T_{TCKTDO}	11.0	ns, max
Maximum TCK clock frequency	F_{TCK}	33	MHz, max

Virtex-E Pin-to-Pin Output Parameter Guidelines

Testing of switching parameters is modeled after testing methods specified by MIL-M-38510/605. All devices are 100% functionally tested. Listed below are representative values for typical pin locations and normal clock loading. Values are expressed in nanoseconds unless otherwise noted.

Global Clock Input to Output Delay for LVTTL, 12 mA, Fast Slew Rate, *with* DLL

Description[1]	Symbol	Device	Speed Grade[2, 3]				Units
			Min[4]	-8	-7	-6	
LVTTL Global Clock Input to Output Delay using Output Flip-flop, 12 mA, Fast Slew Rate, *with* DLL. For data *output* with different standards, adjust the delays with the values shown in **IOB Output Switching Characteristics Standard Adjustments**, page 10.	$T_{ICKOFDLL}$	XCV50E	1.0	3.1	3.1	3.1	ns
		XCV100E	1.0	3.1	3.1	3.1	ns
		XCV200E	1.0	3.1	3.1	3.1	ns
		XCV300E	1.0	3.1	3.1	3.1	ns
		XCV400E	1.0	3.1	3.1	3.1	ns
		XCV600E	1.0	3.1	3.1	3.1	ns
		XCV1000E	1.0	3.1	3.1	3.1	ns
		XCV1600E	1.0	3.1	3.1	3.1	ns
		XCV2000E	1.0	3.1	3.1	3.1	ns
		XCV2600E[5]	1.0	3.1	3.1	3.1	ns
		XCV3200E[5]	1.0	3.1	3.1	3.1	ns

Notes:

1. Listed above are representative values where one global clock input drives one vertical clock line in each accessible column, and where all accessible IOB and CLB flip-flops are clocked by the global clock net.
2. Output timing is measured at 50% V_{CC} threshold with 35 pF external capacitive load. For other I/O standards and different loads, see Table 3 and Table 4.
3. DLL output jitter is already included in the timing calculation.
4. The numbers for Min are **Advance** product specification numbers. See **Definition of Terms**, page 1 for a description.
5. The numbers for XCV2600E and XCV3200E devices are **Preview** specification numbers for all speed grades.

Global Clock Input to Output Delay for LVTTL, 12 mA, Fast Slew Rate, *without* DLL

Description[1]	Symbol	Device	Speed Grade[2]				Units
			Min[4]	-8	-7	-6	
LVTTL Global Clock Input to Output Delay using Output Flip-flop, 12 mA, Fast Slew Rate, *without* DLL. For data *output* with different standards, adjust the delays with the values shown in **IOB Output Switching Characteristics Standard Adjustments**, page 10.	T_{ICKOF}	XCV50E	1.5	4.2	4.4	4.6	ns
		XCV100E	1.5	4.2	4.4	4.6	ns
		XCV200E	1.5	4.3	4.5	4.7	ns
		XCV300E	1.5	4.3	4.5	4.7	ns
		XCV400E	1.5	4.4	4.6	4.8	ns
		XCV600E	1.6	4.5	4.7	4.9	ns
		XCV1000E	1.7	4.6	4.8	5.0	ns
		XCV1600E	1.8	4.7	4.9	5.1	ns
		XCV2000E	1.8	4.8	5.0	5.2	ns
		XCV2600E[4]	2.0	5.0	5.2	5.4	ns
		XCV3200E[4]	2.2	5.2	5.4	5.6	ns

Notes:
1. Listed above are representative values where one global clock input drives one vertical clock line in each accessible column, and where all accessible IOB and CLB flip-flops are clocked by the global clock net.
2. Output timing is measured at 50% V_{CC} threshold with 35 pF external capacitive load. For other I/O standards and different loads, see Table 3 and Table 4.
3. The numbers for Min are **Advance** product specification numbers. See **Definition of Terms**, page 1 for a description.
4. The numbers for XCV2600E and XCV3200E devices are **Preview** specification numbers for all speed grades.

Virtex-E Pin-to-Pin Input Parameter Guidelines

Testing of switching parameters is modeled after testing methods specified by MIL-M-38510/605. All devices are 100% functionally tested. Listed below are representative values for typical pin locations and normal clock loading. Values are expressed in nanoseconds unless otherwise noted

Global Clock Set-Up and Hold for LVTTL Standard, *with* DLL

Description[1]	Symbol	Device	Speed Grade[2, 3]				Units
			Min[4]	-8	-7	-6	
Input Setup and Hold Time Relative to Global Clock Input Signal for LVTTL Standard. For data input with different standards, adjust the setup time delay by the values shown in **IOB Input Switching Characteristics Standard Adjustments**, page 8.							
No Delay	T_{PSDLL}/T_{PHDLL}	XCV50E	1.5 / –0.4	1.5 / –0.4	1.6 / –0.4	1.7 / –0.4	ns
Global Clock and IFF, with DLL		XCV100E	1.5 / –0.4	1.5 / –0.4	1.6 / –0.4	1.7 / –0.4	ns
		XCV200E	1.5 / –0.4	1.5 / –0.4	1.6 / –0.4	1.7 / –0.4	ns
		XCV300E	1.5 / –0.4	1.5 / –0.4	1.6 / –0.4	1.7 / –0.4	ns
		XCV400E	1.5 / –0.4	1.5 / –0.4	1.6 / –0.4	1.7 / –0.4	ns
		XCV600E	1.5 / –0.4	1.5 / –0.4	1.6 / –0.4	1.7 / –0.4	ns
		XCV1000E	1.5 / –0.4	1.5 / –0.4	1.6 / –0.4	1.7 / –0.4	ns
		XCV1600E	1.5 / –0.4	1.5 / –0.4	1.6 / –0.4	1.7 / –0.4	ns
		XCV2000E	1.5 / –0.4	1.5 / –0.4	1.6 / –0.4	1.7 / –0.4	ns
		XCV2600E[5]	1.5 / –0.4	1.5 / –0.4	1.6 / –0.4	1.7 / –0.4	ns
		XCV3200E[5]	1.5 / –0.4	1.5 / –0.4	1.6 / –0.4	1.7 / –0.4	ns

Notes:
1. IFF = Input Flip-Flop or Latch
2. Setup time is measured relative to the Global Clock input signal with the fastest route and the lightest load. Hold time is measured relative to the Global Clock input signal with the slowest route and heaviest load.
3. DLL output jitter is already included in the timing calculation.
4. The numbers for Min are **Advance** product specification numbers. See **Definition of Terms**, page 1 for a description.
5. The numbers for XCV2600E and XCV3200E devices are **Preview** specification numbers for all speed grades.

Global Clock Set-Up and Hold for LVTTL Standard, *without* DLL

Description[1]	Symbol	Device	Speed Grade[2, 3]				Units
			Min[4]	-8	-7	-6	
Input Setup and Hold Time Relative to Global Clock Input Signal for LVTTL Standard. For data input with different standards, adjust the setup time delay by the values shown in **IOB Input Switching Characteristics Standard Adjustments**, page 8.							
Full Delay	T_{PSFD}/T_{PHFD}	XCV50E	1.8 / 0	1.8 / 0	1.8 / 0	1.8 / 0	ns
Global Clock and IFF, without DLL		XCV100E	1.8 / 0	1.8 / 0	1.8 / 0	1.8 / 0	ns
		XCV200E	1.9 / 0	1.9 / 0	1.9 / 0	1.9 / 0	ns
		XCV300E	2.0 / 0	2.0 / 0	2.0 / 0	2.0 / 0	ns
		XCV400E	2.0 / 0	2.0 / 0	2.0 / 0	2.0 / 0	ns
		XCV600E	2.1 / 0	2.1 / 0	2.1 / 0	2.1 / 0	ns
		XCV1000E	2.3 / 0	2.3 / 0	2.3 / 0	2.3 / 0	ns
		XCV1600E	2.5 / 0	2.5 / 0	2.5 / 0	2.5 / 0	ns
		XCV2000E	2.5 / 0	2.5 / 0	2.5 / 0	2.5 / 0	ns
		XCV2600E[5]	2.7 / 0	2.7 / 0	2.7 / 0	2.7 / 0	ns
		XCV3200E[5]	2.8 / 0	2.8 / 0	2.8 / 0	2.8 / 0	ns

Notes:
1. IFF = Input Flip-Flop or Latch
2. Setup time is measured relative to the Global Clock input signal with the fastest route and the lightest load. Hold time is measured relative to the Global Clock input signal with the slowest route and heaviest load.
3. A Zero “0” Hold Time listing indicates no hold time or a negative hold time. Negative values can not be guaranteed “best-case”, but if a “0” is listed, there is no positive hold time.
4. The numbers for Min are **Advance** product specification numbers. See **Definition of Terms**, page 1 for a description.
5. The numbers for XCV2600E and XCV3200E devices are **Preview** specification numbers for all speed grades.

DLL Timing Parameters

Switching parameters testing is modeled after testing methods specified by MIL-M-38510/605; all devices are 100 percent functionally tested. Because of the difficulty in directly measuring many internal timing parameters, those parameters are derived from benchmark timing patterns. The following guidelines reflect worst-case values across the recommended operating conditions.

Description	Symbol	F_{CLKIN}	Speed Grade[1]						Units
			-8		-7		-6		
			Min	Max	Min	Max	Min	Max	
Input Clock Frequency (CLKDLLHF)	FCLKINHF		60	350	60	320	60	275	MHz
Input Clock Frequency (CLKDLL)	FCLKINLF		25	160	25	160	25	135	MHz
Input Clock Low/High Pulse Width	T_{DLLPW}	≥2 5 MHz	5.0		5.0		5.0		ns
		≥ 50 MHz	3.0		3.0		3.0		ns
		≥100 MHz	2.4		2.4		2.4		ns
		≥ 150 MHz	2.0		2.0		2.0		ns
		≥ 200 MHz	1.8		1.8		1.8		ns
		≥ 250 MHz	1.5		1.5		1.5		ns
		≥ 300 MHz	1.3		1.3		NA		ns

Notes:
1. All specifications correspond to Commercial Operating Temperatures (0°C to +85°C).

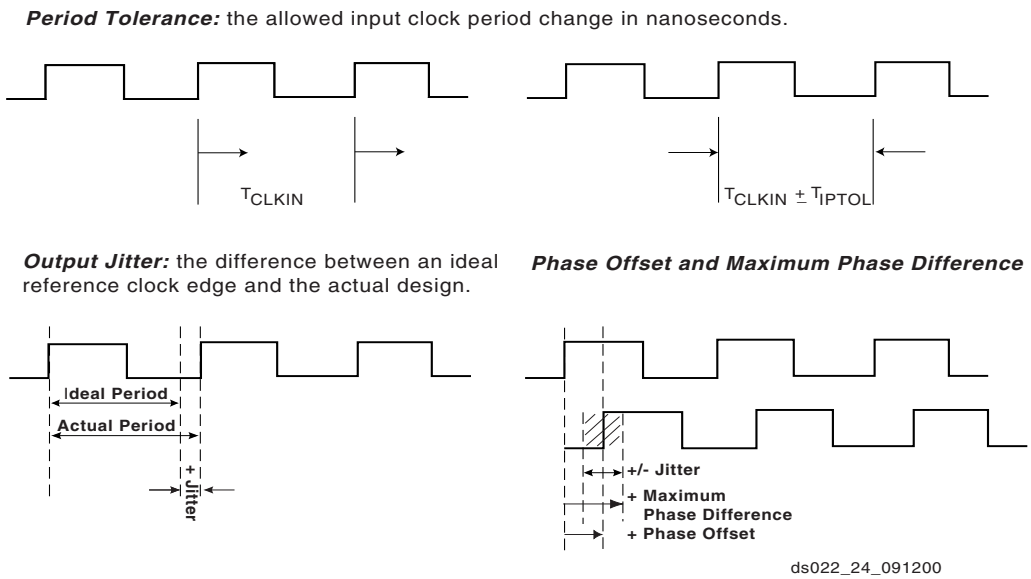

Figure 4: **DLL Timing Waveforms**

DLL Clock Tolerance, Jitter, and Phase Information

All DLL output jitter and phase specifications determined through statistical measurement at the package pins using a clock mirror configuration and matched drivers.

			CLKDLLHF		CLKDLL		
Description	**Symbol**	**F_{CLKIN}**	**Min**	**Max**	**Min**	**Max**	**Units**
Input Clock Period Tolerance	T_{IPTOL}		-	1.0	-	1.0	ns
Input Clock Jitter Tolerance (Cycle to Cycle)	T_{IJITCC}		-	± 150	-	± 300	ps
Time Required for DLL to Acquire Lock	T_{LOCK}	> 60 MHz	-	20	-	20	µs
		50 - 60 MHz	-	-	-	25	µs
		40 - 50 MHz	-	-	-	50	µs
		30 - 40 MHz	-	-	-	90	µs
		25 - 30 MHz	-	-	-	120	µs
Output Jitter (cycle-to-cycle) for any DLL Clock Output[1]	T_{OJITCC}			± 60		± 60	ps
Phase Offset between CLKIN and CLKO[2]	T_{PHIO}			± 100		± 100	ps
Phase Offset between Clock Outputs on the DLL[3]	T_{PHOO}			± 140		± 140	ps
Maximum Phase Difference between CLKIN and CLKO[4]	T_{PHIOM}			± 160		± 160	ps
Maximum Phase Difference between Clock Outputs on the DLL[5]	T_{PHOOM}			± 200		± 200	ps

Notes:
1. **Output Jitter** is cycle-to-cycle jitter measured on the DLL output clock, *excluding* input clock jitter.
2. **Phase Offset between CLKIN and CLKO** is the worst-case fixed time difference between rising edges of CLKIN and CLKO, *excluding* Output Jitter and input clock jitter.
3. **Phase Offset between Clock Outputs on the DLL** is the worst-case fixed time difference between rising edges of any two DLL outputs, *excluding* Output Jitter and input clock jitter.
4. **Maximum Phase Difference between CLKIN an CLKO** is the sum of Output Jitter and Phase Offset between CLKIN and CLKO, or the greatest difference between CLKIN and CLKO rising edges due to DLL alone (*excluding* input clock jitter).
5. **Maximum Phase DIfference between Clock Outputs on the DLL** is the sum of Output JItter and Phase Offset between any DLL clock outputs, or the greatest difference between any two DLL output rising edges sue to DLL alone (*excluding* input clock jitter).
6. All specifications correspond to Commercial Operating Temperatures (0°C to +85°C).

Revision History

The following table shows the revision history for this document.

Date	Version	Revision
12/7/99	1.0	Initial Xilinx release.
1/10/00	1.1	Re-released with spd.txt v. 1.18, FG860/900/1156 package information, and additional DLL, Select RAM and SelectI/O information.
1/28/00	1.2	Added Delay Measurement Methodology table, updated SelectI/O section, Figures 30, 54, & 55, text explaining Table 5, T_{BYP} values, buffered Hex Line info, p. 8, I/O Timing Measurement notes, notes for Tables 15, 16, and corrected F1156 pinout table footnote references.
2/29/00	1.3	Updated pinout tables, V_{CC} page 20, and corrected Figure 20.
5/23/00	1.4	Correction to table on p. 22.
7/10/00	1.5	• Numerous minor edits. • Data sheet upgraded to Preliminary. • Preview -8 numbers added to **Virtex-E Electrical Characteristics** tables.

Date	Version	Revision
8/1/00	1.6	• Reformatted entire document to follow new style guidelines. • Changed speed grade values in tables on pages 35-37.
9/20/00	1.7	• Min values added to **Virtex-E Electrical Characteristics** tables. • XCV2600E and XCV3200E numbers added to **Virtex-E Electrical Characteristics** tables (Module 3). • Corrected user I/O count for XCV100E device in Table 1 (Module 1). • Changed several pins to "No Connect in the XCV100E" and removed duplicate V_{CCINT} pins in Table ~ (Module 4). • Changed pin J10 to "No connect in XCV600E" in Table 74 (Module 4). • Changed pin J30 to "VREF option only in the XCV600E" in Table 74 (Module 4). • Corrected pair 18 in Table 75 (Module 4) to be "AO in the XCV1000E, XCV1600E".
11/20/00	1.8	• Upgraded speed grade -8 numbers in **Virtex-E Electrical Characteristics** tables to Preliminary. • Updated minimums in Table 13 and added notes to Table 14. • Added to note 2 to **Absolute Maximum Ratings**. • Changed speed grade -8 numbers for $T_{SHCKO32}$, T_{REG}, T_{BCCS}, and T_{ICKOF}. • Changed all minimum hold times to –0.4 under **Global Clock Set-Up and Hold for LVTTL Standard, with DLL**. • Revised maximum T_{DLLPW} in -6 speed grade for **DLL Timing Parameters**. • Changed GCLK0 to BA22 for FG860 package in Table 46.
2/12/01	1.9	• Revised footnote for Table 14. • Added numbers to **Virtex-E Electrical Characteristics** tables for XCV1000E and XCV2000E devices. • Updated Table 27 and Table 78 to include values for XCV400E and XCV600E devices. • Revised Table 62 to include pinout information for the XCV400E and XCV600E devices in the BG560 package. • Updated footnotes 1 and 2 for Table 76 to include XCV2600E and XCV3200E devices.
4/02/01	2.0	• Updated numerous values in **Virtex-E Switching Characteristics** tables. • Converted data sheet to modularized format. See the **Virtex-E Data Sheet** section.
4/19/01	2.1	• Updated values in **Virtex-E Switching Characteristics** tables.
07/23/01	2.2	• Under **Absolute Maximum Ratings**, changed (T_{SOL}) to 220 °C. • Changes made to SSTL symbol names in **IOB Input Switching Characteristics Standard Adjustments** table.
07/26/01	2.3	• Removed T_{SOL} parameter and added footnote to **Absolute Maximum Ratings** table.
9/18/01	2.4	• Reworded power supplies footnote to **Absolute Maximum Ratings** table.
10/25/01	2.5	• Updated the speed grade designations used in data sheets, and added Table 1, which shows the current speed grade designation for each device. • Added XCV2600E and XCV3200E values to **DC Characteristics Over Recommended Operating Conditions** and **Power-On Power Supply Requirements** tables.
11/09/01	2.6	• Updated the **Power-On Power Supply Requirements** table.

Virtex-E Data Sheet

The Virtex-E Data Sheet contains the following modules:

- DS022-1, Virtex-E 1.8V FPGAs:
  Introduction and Ordering Information (Module 1)
- DS022-2, Virtex-E 1.8V FPGAs:
  Functional Description (Module 2)
- DS022-3, Virtex-E 1.8V FPGAs:
  DC and Switching Characteristics (Module 3)
- DS022-4, Virtex-E 1.8V FPGAs:
  Pinout Tables (Module 4)

Virtex-E Pin Definitions

Pin Name	Dedicated Pin	Direction	Description
GCK0, GCK1, GCK2, GCK3	Yes	Input	Clock input pins that connect to Global Clock Buffers.
M0, M1, M2	Yes	Input	Mode pins are used to specify the configuration mode.
CCLK	Yes	Input or Output	The configuration Clock I/O pin: it is an input for SelectMAP and slave-serial modes, and output in master-serial mode. After configuration, it is input only, logic level = Don't Care.
PROGRAM	Yes	Input	Initiates a configuration sequence when asserted Low.
DONE	Yes	Bidirectional	Indicates that configuration loading is complete, and that the start-up sequence is in progress. The output can be open drain.
INIT	No	Bidirectional (Open-drain)	When Low, indicates that the configuration memory is being cleared. The pin becomes a user I/O after configuration.
BUSY/DOUT	No	Output	In SelectMAP mode, BUSY controls the rate at which configuration data is loaded. The pin becomes a user I/O after configuration unless the SelectMAP port is retained. In bit-serial modes, DOUT provides preamble and configuration data to downstream devices in a daisy-chain. The pin becomes a user I/O after configuration.
D0/DIN, D1, D2, D3, D4, D5, D6, D7	No	Input or Output	In SelectMAP mode, D0-7 are configuration data pins. These pins become user I/Os after configuration unless the SelectMAP port is retained. In bit-serial modes, DIN is the single data input. This pin becomes a user I/O after configuration.
WRITE	No	Input	In SelectMAP mode, the active-low Write Enable signal. The pin becomes a user I/O after configuration unless the SelectMAP port is retained.
CS	No	Input	In SelectMAP mode, the active-low Chip Select signal. The pin becomes a user I/O after configuration unless the SelectMAP port is retained.
TDI, TDO, TMS, TCK	Yes	Mixed	Boundary-scan Test-Access-Port pins, as defined in IEEE1149.1.
DXN, DXP	Yes	N/A	Temperature-sensing diode pins. (Anode: DXP, cathode: DXN)
V_{CCINT}	Yes	Input	Power-supply pins for the internal core logic.
V_{CCO}	Yes	Input	Power-supply pins for the output drivers (subject to banking rules)
V_{REF}	No	Input	Input threshold voltage pins. Become user I/Os when an external threshold voltage is not needed (subject to banking rules).
GND	Yes	Input	Ground

© 2001 Xilinx, Inc. All rights reserved. All Xilinx trademarks, registered trademarks, patents, and disclaimers are as listed at http://www.xilinx.com/legal.htm.
All other trademarks and registered trademarks are the property of their respective owners. All specifications are subject to change without notice.

Pinout Differences Between Virtex and Virtex-E Families

The same device in the same package for the Virtex-E and Virtex families are pin-compatible with some minor exceptions, listed in Table 1.

XCV200E Device, FG456 Package

The Virtex-E XCV200E has two I/O pins swapped with the Virtex XCV200 to accommodate differential clock pairing.

XCV300E Device, BG432 Package

The Virtex-E XCV300E has eight pins (B26, C7, F1, F30, S AE29, AF1, AH8, and AH24) connected to V_{CCINT} that are not connected in the Virtex XCV300.

XCV400E Device, FG676 Package

The Virtex-E XCV400E has two I/O pins swapped with the Virtex XCV400 to accommodate differential clock pairing.

All Devices, PQ240 and HQ240 Packages

The Virtex devices in PQ240 and HQ240 packages do not have V_{CCO} banking, but Virtex-E devices do. To achieve this, eight Virtex I/O pins (P232, P207, P176, P146, P116, P85, P55, and P25) are now VCCO pins in the Virtex-E family. This change also requires one Virtex I/O or VREF pin to be swapped with a standard I/O pin.

Additionally, accommodating differential clock input pairs in Virtex-E caused some IO_V_{REF} differences in the XCV400E and XCV600E devices only. Virtex IO_V_{REF} pins P215 and P87 are Virtex-E IO_V_{REF} pins P216 and P86, respectively. Virtex-E pins P215 and P87 are IO_DLL.

Table 1: **Pinout Differences Summary**

Part	Package	Pins	Virtex	Virtex-E
XCV200	FG456	E11, U11	I/O	No Connect
		B11, AA11	No Connect	IO_LVDS_DLL
XCV300	BG432	B26, C7, F1, F30, AE29, AF1, AH8, and AH24	No Connect	V_{CCINT}
XCV400	FG676	D13, Y13	I/O	No Connect
		B13, AF13	No Connect	IO_LVDS_DLL
XCV400/600	PQ240/HQ240	P215, P87	IO_V_{REF}	IO_LVDS_DLL
		P216, P86	I/O	IO_V_{REF}
All	PQ240/HQ240	P232, P207, P176, P146, P116, P85, P55, and P25	I/O	V_{CCO}
		P231	I/O	IO_V_{REF}

Low Voltage Differential Signals

The Virtex-E family incorporates low-voltage signalling (LVDS and LVPECL). Two pins are utilized for these signals to be connected to a Virtex-E device. These are known as differential pin pairs. Each differential pin pair has a Positive (P) and a Negative (N) pin. These pairs are labeled in the following manner.

IO_L#[P/N]

where

L = LVDS or LVPECL pin
# = Pin Pair Number
P = Positive
N = Negative

I/O pins for differential signals can either be synchronous or asynchronous, input or output. The pin pairs can be used for synchronous input and output signals as well as asynchronous input signals. However, only some of the low-voltage pairs can be used for asynchronous output signals.

DIfferential signals require the pins of a pair to switch almost simultaneously. If the signals driving the pins are from IOB flip-flops, they are synchronous. If the signals driving the pins are from internal logic, they are asynchronous. Table 2 defines the names and function of the different types of low-voltage pin pairs in the Virtex-E family.

Table 2: **LVDS Pin Pairs**

Pin Name	Description
IO_L#[P/N] Example: IO_L22N	Represents a general IO or a synchronous input/output differential signal. When used as a differential signal, N means Negative I/O and P means Positive I/O.
IO_L#[P/N]_Y Example: IO_L22N_Y	Represents a general IO or a synchronous input/output differential signal, or a part-dependent asynchronous output differential signal.
IO_L#[P/N]_YY Example: O_L22N_YY	Represents a general IO or a synchronous input/output differential signal, or an asynchronous output differential signal.
IO_LVDS_DLL_L#[P/N] Example: IO_LVDS_DLL_L16N	Represents a general IO or a synchronous input/output differential signal, a differential clock input signal, or a DLL input. When used as a differential clock input, this pin is paired with the adjacent GCK pin. The GCK pin is always the positive input in the differential clock input configuration.

Virtex-E Package Pinouts

The Virtex-E family of FPGAs is available in 12 popular packages, including chip-scale, plastic and high heat-dissipation quad flat packs, and ball grid and fine-pitch ball grid arrays. Family members have footprint compatibility across devices provided in the same package. The pinout tables in this section indicate function, pin, and bank information for each package/device combination. Following each pinout table is an additional table summarizing information specific to differential pin pairs for all devices provided in that package.

CS144 Chip-Scale Package

XCV50E, XCV100E, XCV200E, XCV300E and XCV400E devices in CS144 Chip-scale packages have footprint compatibility. In the CS144 package, bank pairs that share a side are internally interconnected, permitting four choices for V_{CCO}. See Table 3.

Table 3: **I/O Bank Pairs and Shared Vcco Pins**

Paired Banks	Shared V_{CCO} Pins
Banks 0 & 1	A2, A13, D7
Banks 2 & 3	B12, G11, M13
Banks 4 & 5	N1, N7, N13
Banks 6 & 7	B2, G2, M2

Pins labeled I0_VREF can be used as either in all parts unless device-dependent, as indicated in the footnotes. If the pin is not used as V_{REF}, it can be used as general I/O. Immediately following Table 4, see Table 5 is Differential Pair information.

Table 4: **CS144 — XCV50E, XCV100E, XCV200E**

Bank	Pin Description	Pin #
0	GCK3	A6
0	IO	B3
0	IO_VREF_L0N_YY	B4[2]
0	IO_L0P_YY	A4
0	IO_L1N_YY	B5
0	IO_L1P_YY	A5
0	IO_LVDS_DLL_L2N	C6
0	IO_VREF	A3[1]
0	IO_VREF	C4
0	IO_VREF	D6
1	GCK2	A7
1	IO	A8
1	IO_LVDS_DLL_L2P	B7
1	IO_L3N_YY	C8
1	IO_L3P_YY	D8
1	IO_L4N_YY	C9
1	IO_VREF_L4P_YY	D9[2]
1	IO_WRITE_L5N_YY	C10
1	IO_CS_L5P_YY	D10

Table 4: **CS144 — XCV50E, XCV100E, XCV200E**

Bank	Pin Description	Pin #
1	IO_VREF	A10
1	IO_VREF	B8
1	IO_VREF	B10[1]
2	IO	D12
2	IO	F12
2	IO_DOUT_BUSY_L6P_YY	C11
2	IO_DIN_D0_L6N_YY	C12
2	IO_D1_L7N	E10
2	IO_VREF_L7P	D13[2]
2	IO_L8N_YY	E13
2	IO_D2_L8P_YY	E12
2	IO_D3_L9N	F11
2	IO_VREF_L9P	F10
2	IO_L10P	F13
2	IO_VREF	C13[1]
2	IO_VREF	D11
3	IO	H13
3	IO	K13
3	IO_L10N	G13
3	IO_VREF_L11N	H11
3	IO_D4_L11P	H12
3	IO_D5_L12N_YY	J13
3	IO_L12P_YY	H10
3	IO_VREF_L13N	J10[2]
3	IO_D6_L13P	J11
3	IO_INIT_L14N_YY	L13
3	IO_D7_L14P_YY	K10
3	IO_VREF	K11[1]
3	IO_VREF	K12
4	GCK0	K7
4	IO	M8
4	IO	M10

Table 4: **CS144 — XCV50E, XCV100E, XCV200E**

Bank	Pin Description	Pin #
4	IO_L15N_YY	M11
4	IO_L15P_YY	L11
4	IO_L16N_YY	K9
4	IO_VREF_L16P_YY	N10[2]
4	IO_L17N_YY	K8
4	IO_L17P_YY	N9
4	IO_LVDS_DLL_L18P	N8
4	IO_VREF	L8
4	IO_VREF	L10
4	IO_VREF	N11[1]
5	GCK1	M7
5	IO	M4
5	IO_LVDS_DLL_L18N	M6
5	IO_L19N_YY	N5
5	IO_L19P_YY	K6
5	IO_VREF_L20N_YY	N4[2]
5	IO_L20P_YY	K5
5	IO_L21N_YY	M3
5	IO_L21P_YY	N3
5	IO_VREF	K4[1]
5	IO_VREF	L4
5	IO_VREF	L6
6	IO	G4
6	IO	J4
6	IO_L25P	H1
6	IO_VREF_L25N	H2
6	IO_L24P_YY	H3
6	IO_L24N_YY	H4
6	IO_L23P	J2
6	IO_VREF_L23N	J3[2]
6	IO_VREF	K1
6	IO_VREF	K2[1]
6	IO_L22N_YY	L1
6	IO_L22P_YY	K3

Table 4: **CS144 — XCV50E, XCV100E, XCV200E**

Bank	Pin Description	Pin #
6	IO_L26N	G1
7	IO	C2
7	IO	D3
7	IO	F3
7	IO_L26P	F2
7	IO_L27N	F4
7	IO_VREF_L27P	E1
7	IO_L28N_YY	E2
7	IO_L28P_YY	E3
7	IO_L29N	D1
7	IO_VREF_L29P	D2[2]
7	IO_VREF	C1[1]
7	IO_VREF	D4
2	CCLK	B13
3	DONE	M12
NA	M0	M1
NA	M1	L2
NA	M2	N2
NA	PROGRAM	L12
NA	TDI	A11
NA	TCK	C3
2	TDO	A12
NA	TMS	B1
NA	VCCINT	A9
NA	VCCINT	B6
NA	VCCINT	C5
NA	VCCINT	G3
NA	VCCINT	G12
NA	VCCINT	M5
NA	VCCINT	M9
NA	VCCINT	N6
0	VCCO	A2

Table 4: **CS144 — XCV50E, XCV100E, XCV200E**

Bank	Pin Description	Pin #
1	VCCO	A13
1	VCCO	D7
2	VCCO	B12
3	VCCO	G11
3	VCCO	M13
4	VCCO	N13
5	VCCO	N1
5	VCCO	N7
6	VCCO	M2
7	VCCO	B2
7	VCCO	G2
NA	GND	A1
NA	GND	B9
NA	GND	B11
NA	GND	C7
NA	GND	D5
NA	GND	E4
NA	GND	E11
NA	GND	F1
NA	GND	G10
NA	GND	J1
NA	GND	J12
NA	GND	L3
NA	GND	L5
NA	GND	L7
NA	GND	L9
NA	GND	N12

Notes:
1. V_{REF} or I/O option only in the XCV200E; otherwise, I/O option only.
2. V_{REF} or I/O option only in the XCV100E, 200E; otherwise, I/O option only.

CS144 Differential Pin Pairs

Virtex-E devices have differential pin pairs that can also provide other functions when not used as a differential pair. A √ in the AO column indicates that the pin pair can be used as an asynchronous output for all devices provided in this package. Pairs with a note number in the AO column are device dependent. They can have asynchronous outputs if the pin pair are in the same CLB row and column in the device. Numbers in this column refer to footnotes that indicate which devices have pin pairs than can be asynchronous outputs. The Other Functions column indicates alternative function(s) not available when the pair is used as a differential pair or differential clock.

Table 5: **CS144 Differential Pin Pair Summary XCV50E, XCV100E, XCV200E**

Pair	Bank	P Pin	N Pin	AO	Other Functions
Global Differential Clock					
0	4	K7	N8	NA	IO_DLL_L18P
1	5	M7	M6	NA	IO_DLL_L18N
2	1	A7	B7	NA	IO_DLL_L2P
3	0	A6	C6	NA	IO_DLL_L2N
IO LVDS Total Pairs: 30, Asynchronous Output Pairs: 18					
0	0	A4	B4	√	VREF
1	0	A5	B5	√	-
2	1	B7	C6	NA	IO_LVDS_DLL
3	1	D8	C8	√	-
4	1	D9	C9	√	VREF
5	1	D10	C10	√	CS, WRITE
6	2	C11	C12	√	DIN, D0
7	2	D13	E10	1	D1, VREF
8	2	E12	E13	√	D2
9	2	F10	F11	1	D3, VREF
10	3	F13	G13	NA	-
11	3	H12	H11	1	D4, VREF
12	3	H10	J13	√	D5
13	3	J11	J10	1	D6, VREF
14	3	K10	L13	√	INIT
15	4	L11	M11	√	-
16	4	N10	K9	√	VREF
17	4	N9	K8	√	-

Table 5: **CS144 Differential Pin Pair Summary XCV50E, XCV100E, XCV200E**

Pair	Bank	P Pin	N Pin	AO	Other Functions
18	5	N8	M6	NA	IO_LVDS_DLL
19	5	K6	N5	√	-
20	5	K5	N4	√	VREF
21	5	N3	M3	√	-
22	6	K3	L1	√	-
23	6	J2	J3	1	VREF
24	6	H3	H4	√	-
25	6	H1	H2	1	VREF
26	7	F2	G1	NA	-
27	7	E1	F4	1	VREF
28	7	E3	E2	√	-
29	7	D2	D1	1	VREF

Note 1: AO in the XCV50E

PQ240 Plastic Quad Flat-Pack Packages

XCV50E, XCV100E, XCV200E, XCV300E and XCV400E devices in PQ240 Plastic Flat-pack packages have footprint compatibility. Pins labeled I0_VREF can be used as either in all parts unless device-dependent as indicated in the footnotes. If the pin is not used as V_{REF}, it can be used as general I/O. Immediately following Table 6, see Table 7 for Differential Pair information.

Table 6: **PQ240 — XCV50E, XCV100E, XCV200E, XCV300E, XCV400E**

Pin #	Pin Description	Bank
P238	IO	0
P237	IO_L0N_Y	0
P236[2]	IO_VREF_L0P_Y	0
P235	IO_L1N_YY	0
P234	IO_L1P_YY	0
P231	IO_VREF	0
P230	IO	0
P229[1]	IO_VREF_L2N_YY	0
P228	IO_L2P_YY	0
P224	IO_L3N_YY	0
P223	IO_L3P_YY	0

Table 6: **PQ240 — XCV50E, XCV100E, XCV200E, XCV300E, XCV400E**

Pin #	Pin Description	Bank
P222	IO	0
P221	IO_L4N_Y	0
P220	IO_L4P_Y	0
P218	IO_VREF_L5N_Y	0
P217	IO_L5P_Y	0
P216[3]	IO_VREF	0
P215	IO_LVDS_DLL_L6N	0
P213	GCK3	0
P210	GCK2	1
P209	IO_LVDS_DLL_L6P	1
P208[3]	IO_VREF	1
P206	IO_L7N_Y	1
P205	IO_VREF_L7P_Y	1
P203	IO_L8N_Y	1
P202	IO_L8P_Y	1
P201	IO	1
P200	IO_L9N_YY	1
P199	IO_L9P_YY	1
P195	IO_L10N_YY	1
P194[1]	IO_VREF_L10P_YY	1
P193	IO	1
P192	IO_L11N_YY	1
P191	IO_VREF_L11P_YY	1
P189	IO_L12N_YY	1
P188	IO_L12P_YY	1
P187[2]	IO_VREF_L13N_Y	1
P186	IO_L13P_Y	1
P185	IO_WRITE_L14N_YY	1
P184	IO_CS_L14P_YY	1
P178	IO_DOUT_BUSY_L15P_YY	2
P177	IO_DIN_D0_L15N_YY	2
P175[2]	IO_VREF	2
P174	IO_L16P_Y	2

Table 6: **PQ240 — XCV50E, XCV100E, XCV200E, XCV300E, XCV400E**

Pin #	Pin Description	Bank
P173	IO_L16N_Y	2
P171	IO_VREF_L17P_Y	2
P170	IO_L17N_Y	2
P169	IO	2
P168[1]	IO_VREF_L18P_Y	2
P167	IO_D1_L18N_Y	2
P163	IO_D2_L19P_YY	2
P162	IO_L19N_YY	2
P161	IO	2
P160	IO_L20P_Y	2
P159	IO_L20N_Y	2
P157	IO_VREF_L21P_Y	2
P156	IO_D3_L21N_Y	2
P155	IO_L22P_Y	2
P154[3]	IO_VREF_L22N_Y	2
P153	IO_L23P_YY	2
P152	IO_L23N_YY	2
P149	IO	3
P147[3]	IO_VREF	3
P145	IO_D4_L24P_Y	3
P144	IO_VREF_L24N_Y	3
P142	IO_L25P_Y	3
P141	IO_L25N_Y	3
P140	IO	3
P139	IO_L26P_YY	3
P138	IO_D5_L26N_YY	3
P134	IO_D6_L27P_Y	3
P133[1]	IO_VREF_L27N_Y	3
P132	IO	3
P131	IO_L28P_Y	3
P130	IO_VREF_L28N_Y	3
P128	IO_L29P_Y	3
P127	IO_L29N_Y	3
P126[2]	IO_VREF_L30P_Y	3

Table 6: **PQ240 — XCV50E, XCV100E, XCV200E, XCV300E, XCV400E**

Pin #	Pin Description	Bank
P125	IO_L30N_Y	3
P124	IO_D7_L31P_YY	3
P123	IO_INIT_L31N_YY	3
P118	IO_L32P_YY	4
P117	IO_L32N_YY	4
P115[2]	IO_VREF	4
P114	IO_L33P_YY	4
P113	IO_L33N_YY	4
P111	IO_VREF_L34P_YY	4
P110	IO_L34N_YY	4
P109	IO	4
P108[1]	IO_VREF_L35P_YY	4
P107	IO_L35N_YY	4
P103	IO_L36P_YY	4
P102	IO_L36N_YY	4
P101	IO	4
P100	IO_L37P_Y	4
P99	IO_L37N_Y	4
P97	IO_VREF_L38P_Y	4
P96	IO_L38N_Y	4
P95	IO_L39P_Y	4
P94[3]	IO_VREF_L39N_Y	4
P93	IO_LVDS_DLL_L40P	4
P92	GCK0	4
P89	GCK1	5
P87	IO_LVDS_DLL_L40N	5
P86[3]	IO_VREF	5
P84	IO_VREF_L41P_Y	5
P82	IO_L41N_Y	5
P81	IO	5
P80	IO	5
P79	IO_L42P_YY	5
P78	IO_L42N_YY	5

Table 6: **PQ240 — XCV50E, XCV100E, XCV200E, XCV300E, XCV400E**

Pin #	Pin Description	Bank
P74	IO_L43P_YY	5
P73[1]	IO_VREF_L43N_YY	5
P72	IO	5
P71	IO_L44P_YY	5
P70	IO_VREF_L44N_YY	5
P68	IO_L45P_YY	5
P67	IO_L45N_YY	5
P66[2]	IO_VREF_L46P_Y	5
P65	IO_L46N_Y	5
P64	IO_L47P_YY	5
P63	IO_L47N_YY	5
P57	IO_L48N_YY	6
P56	IO_L48P_YY	6
P54[2]	IO_VREF	6
P53	IO_L49N_Y	6
P52	IO_L49P_Y	6
P50	IO_VREF_L50N_Y	6
P49	IO_L50P_Y	6
P48	IO	6
P47[1]	IO_VREF_L51N_Y	6
P46	IO_L51P_Y	6
P42	IO_L52N_YY	6
P41	IO_L52P_YY	6
P40	IO	6
P39	IO_L53N_Y	6
P38	IO_L53P_Y	6
P36	IO_VREF_L54N_Y	6
P35	IO_L54P_Y	6
P34	IO_L55N_Y	6
P33[3]	IO_VREF_L55P_Y	6
P31	IO	6
P28	IO_L56N_YY	7
P27	IO_L56P_YY	7

Table 6: **PQ240 — XCV50E, XCV100E, XCV200E, XCV300E, XCV400E**

Pin #	Pin Description	Bank
P26[3]	IO_VREF	7
P24	IO_L57N_Y	7
P23	IO_VREF_L57P_Y	7
P21	IO_L58N_Y	7
P20	IO_L58P_Y	7
P19	IO	7
P18	IO_L59N_YY	7
P17	IO_L59P_YY	7
P13	IO_L60N_Y	7
P12[1]	IO_VREF_L60P_Y	7
P11	IO	7
P10	IO_L61N_Y	7
P9	IO_VREF_L61P_Y	7
P7	IO_L62N_Y	7
P6	IO_L62P_Y	7
P5[2]	IO_VREF_L63N_Y	7
P4	IO_L63P_Y	7
P3	IO	7
P179	CCLK	2
P120	DONE	3
P60	M0	NA
P58	M1	NA
P62	M2	NA
P122	PROGRAM	NA
P183	TDI	NA
P239	TCK	NA
P181	TDO	2
P2	TMS	NA
P225	VCCINT	NA
P214	VCCINT	NA
P198	VCCINT	NA
P164	VCCINT	NA
P148	VCCINT	NA

Table 6: **PQ240 — XCV50E, XCV100E, XCV200E, XCV300E, XCV400E**

Pin #	Pin Description	Bank
P137	VCCINT	NA
P104	VCCINT	NA
P88	VCCINT	NA
P77	VCCINT	NA
P43	VCCINT	NA
P32	VCCINT	NA
P16	VCCINT	NA
P240	VCCO	7
P232	VCCO	0
P226	VCCO	0
P212	VCCO	0
P207	VCCO	1
P197	VCCO	1
P180	VCCO	1
P176	VCCO	2
P165	VCCO	2
P150	VCCO	2
P146	VCCO	3
P136	VCCO	3
P121	VCCO	3
P116	VCCO	4
P105	VCCO	4
P90	VCCO	4
P85	VCCO	5
P76	VCCO	5
P61	VCCO	5
P55	VCCO	6
P44	VCCO	6
P30	VCCO	6
P25	VCCO	7
P15	VCCO	7
P233	GND	NA
P227	GND	NA

Table 6: **PQ240 — XCV50E, XCV100E, XCV200E, XCV300E, XCV400E**

Pin #	Pin Description	Bank
P219	GND	NA
P211	GND	NA
P204	GND	NA
P196	GND	NA
P190	GND	NA
P182	GND	NA
P172	GND	NA
P166	GND	NA
P158	GND	NA
P151	GND	NA
P143	GND	NA
P135	GND	NA
P129	GND	NA
P119	GND	NA
P112	GND	NA
P106	GND	NA
P98	GND	NA
P91	GND	NA
P83	GND	NA
P75	GND	NA
P69	GND	NA
P59	GND	NA
P51	GND	NA
P45	GND	NA
P37	GND	NA
P29	GND	NA
P22	GND	NA
P14	GND	NA
P8	GND	NA
P1	GND	NA

Notes:

1. V_{REF} or I/O option only in the XCV100E, 200E, 300E, 400E; otherwise, I/O option only.
2. V_{REF} or I/O option only in the XCV200E, 300E, 400E; otherwise, I/O option only.
3. V_{REF} or I/O option only in the XCV400E; otherwise, I/O option only.

PQ240 Differential Pin Pairs

Virtex-E devices have differential pin pairs that can also provide other functions when not used as a differential pair. A √ in the AO column indicates that the pin pair can be used as an asynchronous output for all devices provided in this package. Pairs with a note number in the AO column are device dependent. They can have asynchronous outputs if the pin pair are in the same CLB row and column in the device. Numbers in this column refer to footnotes that indicate which devices have pin pairs than can be asynchronous outputs. The Other Functions column indicates alternative function(s) not available when the pair is used as a differential pair or differential clock.

Table 7: **PQ240 Differential Pin Pair Summary XCV50E, XCV100E, XCV200E, XCV300E, XCV400E**

Pair	Bank	P Pin	N Pin	AO	Other Functions
Global Differential Clock					
0	4	P92	P93	NA	IO_DLL_L40P
1	5	P89	P87	NA	IO_DLL_L40N
2	1	P210	P209	NA	IO_DLL_L6P
3	0	P213	P215	NA	IO_DLL_L6N
IO LVDS Total Pairs: 64, Asynchronous Outputs Pairs: 27					
0	0	P236	P237	1	VREF
1	0	P234	P235	√	-
2	0	P228	P229	√	VREF
3	0	P223	P224	√	-
4	0	P220	P221	3	-
5	0	P217	P218	3	VREF
6	1	P209	P215	NA	IO_LVDS_DLL
7	1	P205	P206	3	VREF
8	1	P202	P203	3	-
9	1	P199	P200	√	-
10	1	P194	P195	√	VREF
11	1	P191	P192	√	VREF
12	1	P188	P189	√	-
13	1	P186	P187	1	VREF
14	1	P184	P185	√	CS
15	2	P178	P177	√	DIN, D0

Table 7: **PQ240 Differential Pin Pair Summary XCV50E, XCV100E, XCV200E, XCV300E, XCV400E**

Pair	Bank	P Pin	N Pin	AO	Other Functions
16	2	P174	P173	2	-
17	2	P171	P170	3	VREF
18	2	P168	P167	4	D1, VREF
19	2	P163	P162	√	D2
20	2	P160	P159	2	-
21	2	P157	P156	4	D3, VREF
22	2	P155	P154	5	VREF
23	2	P153	P152	√	-
24	3	P145	P144	4	D4, VREF
25	3	P142	P141	2	-
26	3	P139	P138	√	D5
27	3	P134	P133	4	VREF
28	3	P131	P130	3	VREF
29	3	P128	P127	2	-
30	3	P126	P125	6	VREF
31	3	P124	P123	√	INIT
32	4	P118	P117	√	-
33	4	P114	P113	√	-
34	4	P111	P110	√	VREF
35	4	P108	P107	√	VREF
36	4	P103	P102	√	-
37	4	P100	P99	3	-
38	4	P97	P96	3	VREF
39	4	P95	P94	7	VREF
40	5	P93	P87	NA	IO_LVDS_DLL
41	5	P84	P82	8	VREF
42	5	P79	P78	√	-
43	5	P74	P73	√	VREF
44	5	P71	P70	√	VREF
45	5	P68	P67	√	-
46	5	P66	P65	1	VREF
47	5	P64	P63	√	-

Table 7: **PQ240 Differential Pin Pair Summary XCV50E, XCV100E, XCV200E, XCV300E, XCV400E**

Pair	Bank	P Pin	N Pin	AO	Other Functions
48	6	P56	P57	√	-
49	6	P52	P53	2	-
50	6	P49	P50	3	VREF
51	6	P46	P47	4	VREF
52	6	P41	P42	√	-
53	6	P38	P39	2	-
54	6	P35	P36	4	VREF
55	6	P33	P34	5	VREF
56	7	P27	P28	√	-
57	7	P23	P24	4	VREF
58	7	P20	P21	2	-
59	7	P17	P18	√	-
60	7	P12	P13	4	VREF
61	7	P9	P10	3	VREF
62	7	P6	P7	2	-
63	7	P4	P5	6	VREF

Notes:
1. AO in the XCV50E.
2. AO in the XCV50E, 100E, 200E, 300E.
3. AO in the XCV50E, 200E, 300E, 400E.
4. AO in the XCV50E, 300E, 400E.
5. AO in the XCV100E, 200E, 400E.
6. AO in the XCV100E, 400E.
7. AO in the XCV50E, 200E, 400E.
8. AO in the XCV100E.

HQ240 High-Heat Quad Flat-Pack Packages

XCV600E and XCV1000E devices in High-heat dissipation Quad Flat-pack packages have footprint compatibility. Pins labeled I0_VREF can be used as either in all parts unless device-dependent as indicated in the footnotes. If the pin is not used as V_{REF}, it can be used as general I/O. Immediately following Table 8, see Table 9 for Differential Pair information.

Table 8: **HQ240 — XCV600E, XCV1000E**

Pin #	Pin Description	Bank
P240	VCCO	7
P239	TCK	NA
P238	IO	0
P237	IO_L0N	0
P236	IO_VREF_L0P	0
P235	IO_L1N_YY	0
P234	IO_L1P_YY	0
P233	GND	NA
P232	VCCO	0
P231	IO_VREF	0
P230	IO_VREF	0
P229	IO_VREF_L2N_YY	0
P228	IO_L2P_YY	0
P227	GND	NA
P226	VCCO	0
P225	VCCINT	NA
P224	IO_L3N_YY	0
P223	IO_L3P_YY	0
P222	IO_VREF	0[1]
P221	IO_L4N_Y	0
P220	IO_L4P_Y	0
P219	GND	NA
P218	IO_VREF_L5N_Y	0
P217	IO_L5P_Y	0
P216	IO_VREF	0
P215	IO_LVDS_DLL_L6N	0
P214	VCCINT	NA
P213	GCK3	0
P212	VCCO	0
P211	GND	NA

Table 8: **HQ240 — XCV600E, XCV1000E**

Pin #	Pin Description	Bank
P210	GCK2	1
P209	IO_LVDS_DLL_L6P	1
P208	IO_VREF	1
P207	VCCO	1
P206	IO_L7N_Y	1
P205	IO_VREF_L7P_Y	1
P204	GND	NA
P203	IO_L8N_Y	1
P202	IO_L8P_Y	1
P201[1]	IO_VREF	1
P200	IO_L9N_YY	1
P199	IO_L9P_YY	1
P198	VCCINT	NA
P197	VCCO	1
P196	GND	NA
P195	IO_L10N_YY	1
P194	IO_VREF_L10P_YY	1
P193	IO_VREF	1
P192	IO_L11N_YY	1
P191	IO_VREF_L11P_YY	1
P190	GND	NA
P189	IO_L12N_YY	1
P188	IO_L12P_YY	1
P187	IO_VREF_L13N	1
P186	IO_L13P	1
P185	IO_WRITE_L14N_YY	1
P184	IO_CS_L14P_YY	1
P183	TDI	NA
P182	GND	NA
P181	TDO	2
P180	VCCO	1
P179	CCLK	2
P178	IO_DOUT_BUSY_L15P_YY	2
P177	IO_DIN_D0_L15N_YY	2
P176	VCCO	2
P175	IO_VREF	2

Table 8: **HQ240 — XCV600E, XCV1000E**

Pin #	Pin Description	Bank
P174	IO_L16P_Y	2
P173	IO_L16N_Y	2
P172	GND	NA
P171	IO_VREF_L17P_Y	2
P170	IO_L17N_Y	2
P169	IO_VREF	2
P168	IO_VREF_L18P_Y	2
P167	IO_D1_L18N_Y	2
P166	GND	NA
P165	VCCO	2
P164	VCCINT	NA
P163	IO_D2_L19P_YY	2
P162	IO_L19N_YY	2
P161[1]	IO_VREF	2
P160	IO_L20P_Y	2
P159	IO_L20N_Y	2
P158	GND	NA
P157	IO_VREF_L21P_Y	2
P156	IO_D3_L21N_Y	2
P155	IO_L22P_Y	2
P154	IO_VREF_L22N_Y	2
P153	IO_L23P_YY	2
P152	IO_L23N_YY	2
P151	GND	NA
P150	VCCO	2
P149	IO	3
P148	VCCINT	NA
P147	IO_VREF	3
P146	VCCO	3
P145	IO_D4_L24P_Y	3
P144	IO_VREF_L24N_Y	3
P143	GND	NA
P142	IO_L25P_Y	3
P141	IO_L25N_Y	3
P140[1]	IO_VREF	3
P139	IO_L26P_YY	3

Table 8: **HQ240 — XCV600E, XCV1000E**

Pin #	Pin Description	Bank
P138	IO_D5_L26N_YY	3
P137	VCCINT	NA
P136	VCCO	3
P135	GND	NA
P134	IO_D6_L27P_Y	3
P133	IO_VREF_L27N_Y	3
P132	IO_VREF	3
P131	IO_L28P_Y	3
P130	IO_VREF_L28N_Y	3
P129	GND	NA
P128	IO_L29P_Y	3
P127	IO_L29N_Y	3
P126	IO_VREF_L30P_Y	3
P125	IO_L30N_Y	3
P124	IO_D7_L31P_YY	3
P123	IO_INIT_L31N_YY	3
P122	PROGRAM	NA
P121	VCCO	3
P120	DONE	3
P119	GND	NA
P118	IO_L32P_YY	4
P117	IO_L32N_YY	4
P116	VCCO	4
P115	IO_VREF	4
P114	IO_L33P_YY	4
P113	IO_L33N_YY	4
P112	GND	NA
P111	IO_VREF_L34P_YY	4
P110	IO_L34N_YY	4
P109	IO_VREF	4
P108	IO_VREF_L35P_YY	4
P107	IO_L35N_YY	4
P106	GND	NA
P105	VCCO	4
P104	VCCINT	NA
P103	IO_L36P_YY	4

Table 8: **HQ240 — XCV600E, XCV1000E**

Pin #	Pin Description	Bank
P102	IO_L36N_YY	4
P101[1]	IO_VREF	4
P100	IO_L37P_Y	4
P99	IO_L37N_Y	4
P98	GND	NA
P97	IO_VREF_L38P_Y	4
P96	IO_L38N_Y	4
P95	IO_L39P	4
P94	IO_VREF_L39N	4
P93	IO_LVDS_DLL_L40P	4
P92	GCK0	4
P91	GND	NA
P90	VCCO	4
P89	GCK1	5
P88	VCCINT	NA
P87	IO_LVDS_DLL_L40N	5
P86	IO_VREF	5
P85	VCCO	5
P84	IO_VREF_L41P	5
P83	GND	NA
P82	IO_L41N	5
P81	IO	5
P80[1]	IO_VREF	5
P79	IO_L42P_YY	5
P78	IO_L42N_YY	5
P77	VCCINT	NA
P76	VCCO	5
P75	GND	NA
P74	IO_L43P_YY	5
P73	IO_VREF_L43N_YY	5
P72	IO_VREF	5
P71	IO_L44P_YY	5
P70	IO_VREF_L44N_YY	5
P69	GND	NA
P68	IO_L45P_YY	5
P67	IO_L45N_YY	5

Table 8: **HQ240 — XCV600E, XCV1000E**

Pin #	Pin Description	Bank
P66	IO_VREF_L46P	5
P65	IO_L46N	5
P64	IO_L47P_YY	5
P63	IO_L47N_YY	5
P62	M2	NA
P61	VCCO	5
P60	M0	NA
P59	GND	NA
P58	M1	NA
P57	IO_L48N_YY	6
P56	IO_L48P_YY	6
P55	VCCO	6
P54	IO_VREF	6
P53	IO_L49N_Y	6
P52	IO_L49P_Y	6
P51	GND	NA
P50	IO_VREF_L50N_Y	6
P49	IO_L50P_Y	6
P48	IO_VREF	6
P47	IO_VREF_L51N_Y	6
P46	IO_L51P_Y	6
P45	GND	NA
P44	VCCO	6
P43	VCCINT	NA
P42	IO_L52N_YY	6
P41	IO_L52P_YY	6
P40[1]	IO_VREF	6
P39	IO_L53N_Y	6
P38	IO_L53P_Y	6
P37	GND	NA
P36	IO_VREF_L54N_Y	6
P35	IO_L54P_Y	6
P34	IO_L55N_Y	6
P33	IO_VREF_L55P_Y	6
P32	VCCINT	NA
P31	IO	6

Table 8: **HQ240 — XCV600E, XCV1000E**

Pin #	Pin Description	Bank
P30	VCCO	6
P29	GND	NA
P28	IO_L56N_YY	7
P27	IO_L56P_YY	7
P26	IO_VREF	7
P25	VCCO	7
P24	IO_L57N_Y	7
P23	IO_VREF_L57P_Y	7
P22	GND	NA
P21	IO_L58N_Y	7
P20	IO_L58P_Y	7
P19[1]	IO_VREF	7
P18	IO_L59N_YY	7
P17	IO_L59P_YY	7
P16	VCCINT	NA
P15	VCCO	7
P14	GND	NA
P13	IO_L60N_Y	7
P12	IO_VREF_L60P_Y	7
P11	IO_VREF	7
P10	IO_L61N_Y	7
P9	IO_VREF_L61P_Y	7
P8	GND	NA
P7	IO_L62N_Y	7
P6	IO_L62P_Y	7
P5	IO_VREF_L63N_Y	7
P4	IO_L63P_Y	7
P3	IO	7
P2	TMS	NA
P1	GND	NA

Notes:
1. V_{REF} or I/O option only in the XCV1000E; otherwise, I/O option only.

HQ240 Differential Pin Pairs

Virtex-E devices have differential pin pairs that can also provide other functions when not used as a differential pair. A √ in the AO column indicates that the pin pair can be used as an asynchronous output for all devices provided in this package. Pairs with a note number in the AO column are device dependent. They can have asynchronous outputs if the pin pair are in the same CLB row and column in the device. Numbers in this column refer to footnotes that indicate which devices have pin pairs than can be asynchronous outputs. The Other Functions column indicates alternative function(s) not available when the pair is used as a differential pair or differential clock.

Table 9: **HQ240 Differential Pin Pair Summary XCV600E, XCV1000E**

Pair	Bank	P Pin	N Pin	AO	Other Functions
Global Differential Clock					
0	4	P92	P93	NA	IO _DLL_L40P
1	5	P89	P87	NA	IO _DLL_L40N
2	1	P210	P209	NA	IO _DLL_L6P
3	0	P213	P215	NA	IO _DLL_L6N
IO LVDS Total Pairs: 64, Asynchronous Output Pairs: 53					
0	0	P236	P237	NA	VREF
1	0	P234	P235	√	-
2	0	P228	P229	√	VREF
3	0	P223	P224	√	-
4	0	P220	P221	√	-
5	0	P217	P218	√	VREF
6	1	P209	P215	NA	IO_LVDS_DLL
7	1	P205	P206	√	VREF
8	1	P202	P203	√	-
9	1	P199	P200	√	-
10	1	P194	P195	√	VREF
11	1	P191	P192	√	VREF
12	1	P188	P189	√	-
13	1	P186	P187	NA	VREF
14	1	P184	P185	√	CS
15	2	P178	P177	√	DIN, D0

Table 9: **HQ240 Differential Pin Pair Summary XCV600E, XCV1000E**

Pair	Bank	P Pin	N Pin	AO	Other Functions
16	2	P174	P173	√	-
17	2	P171	P170	√	VREF
18	2	P168	P167	√	D1
19	2	P163	P162	√	D2
20	2	P160	P159	√	-
21	2	P157	P156	√	D3
22	2	P155	P154	1	VREF
23	2	P153	P152	√	-
24	3	P145	P144	√	D4, VREF
25	3	P142	P141	√	-
26	3	P139	P138	√	D5
27	3	P134	P133	√	VREF
28	3	P131	P130	√	VREF
29	3	P128	P127	√	-
30	3	P126	P125	1	VREF
31	3	P124	P123	√	INIT
32	4	P118	P117	√	-
33	4	P114	P113	√	-
34	4	P111	P110	√	VREF
35	4	P108	P107	√	VREF
36	4	P103	P102	√	-
37	4	P100	P99	√	-
38	4	P97	P96	√	VREF
39	4	P95	P94	NA	VREF
40	5	P93	P87	NA	IO_LVDS_DLL
41	5	P84	P82	NA	VREF
42	5	P79	P78	√	-
43	5	P74	P73	√	VREF
44	5	P71	P70	√	VREF
45	5	P68	P67	√	-
46	5	P66	P65	NA	VREF
47	5	P64	P63	√	-

Table 9: **HQ240 Differential Pin Pair Summary XCV600E, XCV1000E**

Pair	Bank	P Pin	N Pin	AO	Other Functions
48	6	P56	P57	√	-
49	6	P52	P53	√	-
50	6	P49	P50	√	VREF
51	6	P46	P47	√	VREF
52	6	P41	P42	√	-
53	6	P38	P39	√	-
54	6	P35	P36	√	VREF
55	6	P33	P34	1	VREF
56	7	P27	P28	√	-
57	7	P23	P24	√	VREF
58	7	P20	P21	√	-
59	7	P17	P18	√	-
60	7	P12	P13	√	VREF
61	7	P9	P10	√	VREF
62	7	P6	P7	√	-
63	7	P4	P5	1	VREF

Note 1: AO in the XCV600E.

BG352 Ball Grid Array Packages

XCV100E, XCV200E, and XCV300E devices in BG352 Ball Grid Array packages have footprint compatibility. Pins labeled I0_VREF can be used as either in all parts unless device-dependent as indicated in the footnotes. If the pin is not used as V_{REF}, it can be used as general I/O. Immediately following Table 10, see Table 11 for Differential Pair information.

Table 10: **BG352 — XCV100E, XCV200E, XCV300E**

Bank	Pin Description	Pin #
0	IO	D22
0	IO	C23[1]
0	IO	B24[1]
0	IO	C22
0	IO_VREF_0_L0N_YY	D21[2]
0	IO_L0P_YY	B23
0	IO	A24[1]
0	IO_L1N_YY	A23
0	IO_L1P_YY	D20
0	IO_VREF_0_L2N_YY	C21
0	IO_L2P_YY	B22
0	IO	B21[1]
0	IO	C20[1]
0	IO_L3N	B20
0	IO_L3P	A21
0	IO	D18
0	IO_VREF_0_L4N_YY	C19
0	IO_L4P_YY	B19
0	IO_L5N_YY	D17
0	IO_L5P_YY	C18
0	IO	B18[1]
0	IO_L6N	C17
0	IO_L6P	A18
0	IO	D16[1]
0	IO_L7N_Y	B17
0	IO_L7P_Y	C16
0	IO_VREF_0_L8N_Y	A16
0	IO_L8P_Y	D15

Table 10: **BG352 — XCV100E, XCV200E, XCV300E**

Bank	Pin Description	Pin #
0	IO	C15
0	IO	B15[1]
0	IO_LVDS_DLL_L9N	A15
0	GCK3	D14
1	GCK2	B14
1	IO_LVDS_DLL_L9P	A13
1	IO	B13[1]
1	IO_L10N	C13
1	IO_L10P	A12
1	IO_L11N_Y	B12
1	IO_VREF_1_L11P_Y	C12
1	IO_L12N_Y	A11
1	IO_L12P_Y	B11
1	IO	B10[1]
1	IO_L13N	C11
1	IO_L13P	D11
1	IO	A9[1]
1	IO_L14N_YY	B9
1	IO_L14P_YY	C10
1	IO_L15N_YY	B8
1	IO_VREF_1_L15P_YY	C9
1	IO_L16N _Y	D9
1	IO_L16P _Y	A7
1	IO	B7
1	IO	C8[1]
1	IO	D8[1]
1	IO_L17N_YY	A6
1	IO_VREF_1_L17P_YY	B6
1	IO_L18N_YY	C7
1	IO_L18P_YY	A4
1	IO	B5[1]
1	IO_L19N_YY	C6
1	IO_VREF_1_L19P_YY	D6[2]

Table 10: **BG352 — XCV100E, XCV200E, XCV300E**

Bank	Pin Description	Pin #
1	IO	B4
1	IO	C5[1]
1	IO	A3[1]
1	IO_WRITE_L20N_YY	D5
1	IO_CS_L20P_YY	C4
2	IO_DOUT_BUSY_L21P_YY	E4
2	IO_DIN_D0_L21N_YY	D3
2	IO	C2[1]
2	IO	E3[1]
2	IO	F4
2	IO_VREF_2_L22P_YY	D2[2]
2	IO_L22N_YY	C1
2	IO	D1[1]
2	IO_L23P_YY	G4
2	IO_L23N_YY	F3
2	IO_VREF_2_L24P_Y	E2
2	IO_L24N_Y	F2
2	IO	G3[1]
2	IO	G2[1]
2	IO_L25P	F1
2	IO_L25N	J4
2	IO	H3
2	IO_VREF_2_L26P _Y	H2
2	IO_D1_L26N _Y	G1
2	IO_D2_L27P_YY	J3
2	IO_L27N_YY	J2
2	IO	K3[1]
2	IO_L28P	J1
2	IO_L28N	L4
2	IO	K2[1]
2	IO_L29P_YY	L3
2	IO_L29N_YY	L2
2	IO_VREF_2_L30P _Y	M4

Table 10: **BG352 — XCV100E, XCV200E, XCV300E**

Bank	Pin Description	Pin #
2	IO_D3_L30N _Y	M3
2	IO_L31P	M2
2	IO_L31N	M1
2	IO	N3[1]
2	IO_L32P_YY	N4
2	IO_L32N_YY	N2
3	IO	P1
3	IO	P3[1]
3	IO_L33P	R1
3	IO_L33N	R2
3	IO_D4_L34P _Y	R3
3	IO_VREF_3_L34N _Y	R4
3	IO_L35P_YY	T2
3	IO_L35N_YY	U2
3	IO	T3[1]
3	IO_L36P	T4
3	IO_L36N	V1
3	IO	V2[1]
3	IO_L37P_YY	U3
3	IO_D5_L37N_YY	U4
3	IO_D6_L38P _Y	V3
3	IO_VREF_3_L38N _Y	V4
3	IO_L39P _Y	Y1
3	IO_L39N _Y	Y2
3	IO	W3
3	IO	W4[1]
3	IO	AA1[1]
3	IO_L40P_Y	AA2
3	IO_VREF_3_L40N_Y	Y3
3	IO_L41P_YY	AC1
3	IO_L41N_YY	AB2
3	IO	AA3[1]
3	IO_L42P_YY	AA4

Table 10: **BG352 — XCV100E, XCV200E, XCV300E**

Bank	Pin Description	Pin #
3	IO_VREF_3_L42N_YY	AC2[2]
3	IO	AB3
3	IO	AD1[1]
3	IO	AB4[1]
3	IO_D7_L43P_YY	AC3
3	IO_INIT_L43N_YY	AD2
4	IO_L44P_YY	AC5
4	IO_L44N_YY	AD4
4	IO	AE3[1]
4	IO	AD5[1]
4	IO	AC6
4	IO_VREF_4_L45P_YY	AE4[2]
4	IO_L45N_YY	AF3
4	IO	AF4[1]
4	IO_L46P_YY	AC7
4	IO_L46N_YY	AD6
4	IO_VREF_4_L47P_YY	AE5
4	IO_L47N_YY	AE6
4	IO	AD7[1]
4	IO	AE7[1]
4	IO_L48P	AF6
4	IO_L48N	AC9
4	IO	AD8
4	IO_VREF_4_L49P_YY	AE8
4	IO_L49N_YY	AF7
4	IO_L50P_YY	AD9
4	IO_L50N_YY	AE9
4	IO	AD10[1]
4	IO_L51P	AF9
4	IO_L51N	AC11
4	IO	AE10[1]
4	IO_L52P_Y	AD11
4	IO_L52N_Y	AE11

Table 10: **BG352 — XCV100E, XCV200E, XCV300E**

Bank	Pin Description	Pin #
4	IO_VREF_4_L53P_Y	AC12
4	IO_L53N_Y	AD12
4	IO_L54P	AE12
4	IO_L54N	AF12
4	IO	AD13[1]
4	IO_LVDS_DLL_L55P	AC13
4	GCK0	AE13
5	GCK1	AF14
5	IO_LVDS_DLL_L55N	AD14
5	IO	AF15[1]
5	IO	AE15
5	IO_L56P_Y	AD15
5	IO_VREF_5_L56N_Y	AC15
5	IO_L57P_Y	AE16
5	IO_L57N_Y	AE17
5	IO	AD16[1]
5	IO_L58P	AC16
5	IO_L58N	AF18
5	IO	AE18[1]
5	IO_L59P_YY	AD17
5	IO_L59N_YY	AC17
5	IO_L60P_YY	AD18
5	IO_VREF_5_L60N_YY	AC18
5	IO_L61P _Y	AF20
5	IO_L61N _Y	AE20
5	IO	AD19
5	IO	AC19[1]
5	IO	AF21[1]
5	IO_L62P_YY	AE21
5	IO_VREF_5_L62N_YY	AD20
5	IO_L63P_YY	AF23
5	IO_L63N_YY	AE22
5	IO	AD21[1]

Table 10: **BG352 — XCV100E, XCV200E, XCV300E**

Bank	Pin Description	Pin #
5	IO_L64P_YY	AC21
5	IO_VREF_5_L64N_YY	AE23[2]
5	IO	AD22
5	IO	AF24[1]
5	IO	AC22[1]
6	IO_L65N_YY	AC24
6	IO_L65P_YY	AD25
6	IO	AB24[1]
6	IO	AA23[1]
6	IO	AC25
6	IO_VREF_6_L66N_YY	AD26[2]
6	IO_L66P_YY	AC26
6	IO	Y23[1]
6	IO_L67N_YY	AA24
6	IO_L67P_YY	AB25
6	IO_VREF_6_L68N_Y	AA25
6	IO_L68P_Y	Y24
6	IO	Y25[1]
6	IO	AA26[1]
6	IO_L69N	V23
6	IO_L69P	W24
6	IO	W25
6	IO_VREF_6_L70N _Y	Y26
6	IO_L70P _Y	U23
6	IO_L71N_YY	V25
6	IO_L71P_YY	U24
6	IO	V26[1]
6	IO_L72N	T23
6	IO_L72P	U25
6	IO	T24[1]
6	IO_L73N_YY	T25
6	IO_L73P_YY	T26
6	IO_VREF_6_L74N _Y	R24

Table 10: **BG352 — XCV100E, XCV200E, XCV300E**

Bank	Pin Description	Pin #
6	IO_L74P _Y	R25
6	IO_L75N	R26
6	IO_L75P	P24
6	IO	P23[1]
6	IO	N26
7	IO_L76N_YY	N25
7	IO_L76P_YY	N24
7	IO	M26[1]
7	IO_L77N	M25
7	IO_L77P	M24
7	IO_L78N _Y	M23
7	IO_VREF_7_L78P _Y	L26
7	IO_L79N_YY	K25
7	IO_L79P_YY	L24
7	IO	L23[1]
7	IO_L80N	J26
7	IO_L80P	J25
7	IO	K24[1]
7	IO_L81N_YY	K23
7	IO_L81P_YY	H25
7	IO_L82N _Y	J23
7	IO_VREF_7_L82P _Y	G26
7	IO_L83N _Y	G25
7	IO_L83P _Y	H24
7	IO	H23
7	IO	F26[1]
7	IO	F25[1]
7	IO_L84N_Y	G24
7	IO_VREF_7_L84P_Y	D26
7	IO_L85N_YY	E25
7	IO_L85P_YY	F24
7	IO	F23[1]
7	IO_L86N_YY	D25

Table 10: **BG352 — XCV100E, XCV200E, XCV300E**

Bank	Pin Description	Pin #
7	IO_VREF_7_L86P_YY	E24[2]
7	IO	C26
7	IO	E23[1]
7	IO	D24[1]
7	IO	C25
NA	TDI	B3
NA	TDO	D4
NA	CCLK	C3
NA	TCK	C24
NA	TMS	D23
NA	PROGRAM	AC4
NA	DONE	AD3
NA	DXN	AD23
NA	DXP	AE24
NA	M2	AC23
NA	M0	AD24
NA	M1	AB23
NA	VCCINT	A20
NA	VCCINT	B16
NA	VCCINT	C14
NA	VCCINT	D12
NA	VCCINT	D10
NA	VCCINT	K4
NA	VCCINT	L1
NA	VCCINT	P2
NA	VCCINT	T1
NA	VCCINT	W2
NA	VCCINT	AC10
NA	VCCINT	AF11
NA	VCCINT	AE14
NA	VCCINT	AF16
NA	VCCINT	AE19

Table 10: **BG352 — XCV100E, XCV200E, XCV300E**

Bank	Pin Description	Pin #
NA	VCCINT	V24
NA	VCCINT	R23
NA	VCCINT	P25
NA	VCCINT	L25
NA	VCCINT	J24
0	VCCO	D19
0	VCCO	B25
0	VCCO	A17
1	VCCO	D13
1	VCCO	D7
1	VCCO	A10
2	VCCO	K1
2	VCCO	H4
2	VCCO	B2
3	VCCO	Y4
3	VCCO	U1
3	VCCO	P4
4	VCCO	AF10
4	VCCO	AE2
4	VCCO	AC8
5	VCCO	AF17
5	VCCO	AC20
5	VCCO	AC14
6	VCCO	AE25
6	VCCO	W23
6	VCCO	U26
7	VCCO	N23
7	VCCO	K26
7	VCCO	G23
NA	GND	A26
NA	GND	A25
NA	GND	A22

Table 10: **BG352 — XCV100E, XCV200E, XCV300E**

Bank	Pin Description	Pin #
NA	GND	A19
NA	GND	A14
NA	GND	A8
NA	GND	A5
NA	GND	A2
NA	GND	A1
NA	GND	B26
NA	GND	B1
NA	GND	E26
NA	GND	E1
NA	GND	H26
NA	GND	H1
NA	GND	N1
NA	GND	P26
NA	GND	W26
NA	GND	W1
NA	GND	AB26
NA	GND	AB1
NA	GND	AE26
NA	GND	AE1
NA	GND	AF26
NA	GND	AF25
NA	GND	AF22
NA	GND	AF19
NA	GND	AF13
NA	GND	AF8
NA	GND	AF5
NA	GND	AF2
NA	GND	AF1

Notes:
1. No Connect in the XCV100E.
2. V_{REF} or I/O option only in the XCV200E and XCV300E; otherwise, I/O option only.

BG352 Differential Pin Pairs

Virtex-E devices have differential pin pairs that can also provide other functions when not used as a differential pair. A check (√) in the AO column indicates that the pin pair can be used as an asynchronous output for all devices provided in this package. Pairs with a note number in the AO column are device dependent. They can have asynchronous outputs if the pin pair are in the same CLB row and column in the device. Numbers in this column refer to footnotes that indicate which devices have pin pairs than can be asynchronous outputs. The Other Functions column indicates alternative function(s) not available when the pair is used as a differential pair or differential clock

Table 11: **BG352 Differential Pin Pair Summary XCV100E, XCV200E, XCV300E**

Pair	Bank	P Pin	N Pin	AO	Other Functions
Global Differential Clock					
0	4	AE13	AC13	NA	IO LVDS 55
1	5	AF14	AD14	NA	IO LVDS 55
2	1	B14	A13	NA	IO LVDS 9
3	0	D14	A15	NA	IO LVDS 9
IO LVDS Total Outputs: 87, Asynchronous Output Pairs: 43					
0	0	B23	D21	√	VREF_0
1	0	D20	A23	√	-
2	0	B22	C21	√	VREF_0
3	0	A21	B20	2	-
4	0	B19	C19	√	VREF_0
5	0	C18	D17	√	-
6	0	A18	C17	2	-
7	0	C16	B17	√	-
8	0	D15	A16	√	VREF_0
9	1	A13	A15	√	GCLK LVDS 3/2
10	1	A12	C13	2	-
11	1	C12	B12	√	VREF_1
12	1	B11	A11	√	-
13	1	D11	C11	2	-
14	1	C10	B9	√	-
15	1	C9	B8	√	VREF_1
16	1	A7	D9	1	-
17	1	B6	A6	√	VREF_1
18	1	A4	C7	√	-

Table 11: **BG352 Differential Pin Pair Summary XCV100E, XCV200E, XCV300E**

Pair	Bank	P Pin	N Pin	AO	Other Functions
19	1	D6	C6	√	VREF_1
20	1	C4	D5	√	CS
21	2	E4	D3	√	DIN_D0
22	2	D2	C1	√	VREF_2
23	2	G4	F3	√	-
24	2	E2	F2	√	VREF_2
25	2	F1	J4	2	-
26	2	H2	G1	√	D1
27	2	J3	J2	√	D2
28	2	J1	L4	1	-
29	2	L3	L2	√	-
30	2	M4	M3	√	D3
31	2	M2	M1	2	-
32	2	N4	N2	√	-
33	3	R1	R2	2	-
34	3	R3	R4	√	VREF_3
35	3	T2	U2	√	-
36	3	T4	V1	1	-
37	3	U3	U4	√	D5
38	3	V3	V4	√	VREF_3
39	3	Y1	Y2	1	-
40	3	AA2	Y3	√	VREF_3
41	3	AC1	AB2	√	-
42	3	AA4	AC2	√	VREF_3
43	3	AC3	AD2	√	INIT
44	4	AC5	AD4	√	-
45	4	AE4	AF3	√	VREF_4
46	4	AC7	AD6	√	-
47	4	AE5	AE6	√	VREF_4
48	4	AF6	AC9	2	-
49	4	AE8	AF7	√	VREF_4
50	4	AD9	AE9	√	-
51	4	AF9	AC11	2	-
52	4	AD11	AE11	√	-
53	4	AC12	AD12	√	VREF_4
54	4	AE12	AF12	2	-

Table 11: **BG352 Differential Pin Pair Summary XCV100E, XCV200E, XCV300E**

Pair	Bank	P Pin	N Pin	AO	Other Functions
55	5	AC13	AD14	√	GCLK LVDS 1/0
56	5	AD15	AC15	√	VREF_5
57	5	AE16	AE17	√	-
58	5	AC16	AF18	2	-
59	5	AD17	AC17	√	-
60	5	AD18	AC18	√	VREF_5
61	5	AF20	AE20	1	-
62	5	AE21	AD20	√	VREF_5
63	5	AF23	AE22	√	-
64	5	AC21	AE23	√	VREF_5
65	6	AD25	AC24	√	-
66	6	AC26	AD26	√	VREF_6
67	6	AB25	AA24	√	-
68	6	Y24	AA25	√	VREF_6
69	6	W24	V23	2	-
70	6	U23	Y26	√	VREF_6
71	6	U24	V25	√	-
72	6	U25	T23	1	-
73	6	T26	T25	√	-
74	6	R25	R24	√	VREF_6
75	6	P24	R26	2	-
76	7	N24	N25	√	-
77	7	M24	M25	2	-
78	7	L26	M23	√	VREF_7
79	7	L24	K25	√	-
80	7	J25	J26	1	-
81	7	H25	K23	√	-
82	7	G26	J23	√	VREF_7
83	7	H24	G25	1	-
84	7	D26	G24	√	VREF_7
85	7	F24	E25	√	-
86	7	E24	D25	√	VREF_7

Notes:
1. AO in the XCV100E.
2. AO in the XCV200E.

BG432 Ball Grid Array Packages

XCV300E, XCV400E, and XCV600E devices in BG432 Ball Grid Array packages have footprint compatibility. Pins labeled I0_VREF can be used as either in all parts unless device-dependent as indicated in the footnotes. If the pin is not used as V_{REF}, it can be used as general I/O. Immediately following Table 12, see Table 13 for Differential Pair information.

Table 12: **BG432 — XCV300E, XCV400E, XCV600E**

Bank	Pin Description	Pin #
0	GCK3	D17
0	IO	A22
0	IO	A26
0	IO	B20
0	IO	C23
0	IO	C28
0	IO_L0N_Y	B29
0	IO_L0P_Y	D27
0	IO_L1N_YY	B28
0	IO_L1P_YY	C27
0	IO_VREF_L2N_YY	D26
0	IO_L2P_YY	A28
0	IO_L3N_Y	B27
0	IO_L3P_Y	C26
0	IO_L4N_YY	D25
0	IO_L4P_YY	A27
0	IO_VREF_L5N_YY	D24
0	IO_L5P_YY	C25
0	IO_L6N_Y	B25
0	IO_L6P_Y	D23
0	IO_VREF_L7N_Y	C24[1]
0	IO_L7P_Y	B24
0	IO_VREF_L8N_YY	D22
0	IO_L8P_YY	A24
0	IO_L9N_YY	C22
0	IO_L9P_YY	B22
0	IO_L10N_YY	C21
0	IO_L10P_YY	D20
0	IO_L11N_YY	B21
0	IO_L11P_YY	C20

Table 12: **BG432 — XCV300E, XCV400E, XCV600E**

Bank	Pin Description	Pin #
0	IO_L12N_YY	A20
0	IO_L12P_YY	D19
0	IO_VREF_L13N_YY	B19
0	IO_L13P_YY	A19
0	IO_L14N_Y	B18
0	IO_L14P_Y	D18
0	IO_VREF_L15N_Y	C18[2]
0	IO_L15P_Y	B17
0	IO_LVDS_DLL_L16N	C17
1	GCK2	A16
1	IO	A12
1	IO	B9
1	IO	B11
1	IO	C16
1	IO	D9
1	IO_LVDS_DLL_L16P	B16
1	IO_L17N_Y	A15
1	IO_L17P_Y	B15[2]
1	IO_L18N_Y	C15
1	IO_L18P_Y	D15
1	IO_L19N_YY	B14
1	IO_VREF_L19P_YY	A13
1	IO_L20N_YY	B13
1	IO_L20P_YY	D14
1	IO_L21N_YY	C13
1	IO_L21P_YY	B12
1	IO_L22N_YY	D13
1	IO_L22P_YY	C12
1	IO_L23N_YY	D12
1	IO_L23P_YY	C11
1	IO_L24N_YY	B10
1	IO_VREF_L24P_YY	C10
1	IO_L25N_Y	C9
1	IO_VREF_L25P_Y	D10[1]
1	IO_L26N_Y	A8

Table 12: **BG432 — XCV300E, XCV400E, XCV600E**

Bank	Pin Description	Pin #
1	IO_L26P_Y	B8
1	IO_L27N_YY	C8
1	IO_VREF_L27P_YY	B7
1	IO_L28N_YY	D8
1	IO_L28P_YY	A6
1	IO_L29N_Y	B6
1	IO_L29P_Y	D7
1	IO_L30N_YY	A5
1	IO_VREF_L30P_YY	C6
1	IO_L31N_YY	B5
1	IO_L31P_YY	D6
1	IO_L32N_Y	A4
1	IO_L32P_Y	C5
1	IO_WRITE_L33N_YY	B4
1	IO_CS_L33P_YY	D5
2	IO	H4
2	IO	J3
2	IO	L3
2	IO	M1
2	IO	R2
2	IO_DOUT_BUSY_L34P_YY	D3
2	IO_DIN_D0_L34N_YY	C2
2	IO_L35P	D2
2	IO_L35N	E4
2	IO_L36P_Y	D1
2	IO_L36N_Y	E3
2	IO_VREF_L37P_Y	E2
2	IO_L37N_Y	F4
2	IO_L38P	E1
2	IO_L38N	F3
2	IO_L39P_Y	F2
2	IO_L39N_Y	G4
2	IO_VREF_L40P_YY	G3
2	IO_L40N_YY	G2
2	IO_L41P_Y	H3

Table 12: **BG432 — XCV300E, XCV400E, XCV600E**

Bank	Pin Description	Pin #
2	IO_L41N_Y	H2
2	IO_VREF_L42P_Y	H1[1]
2	IO_L42N_Y	J4
2	IO_VREF_L43P_YY	J2
2	IO_D1_L43N_YY	K4
2	IO_D2_L44P_YY	K2
2	IO_L44N_YY	K1
2	IO_L45P_Y	L2
2	IO_L45N_Y	M4
2	IO_L46P_Y	M3
2	IO_L46N_Y	M2
2	IO_L47P_Y	N4
2	IO_L47N_Y	N3
2	IO_VREF_L48P_YY	N1
2	IO_D3_L48N_YY	P4
2	IO_L49P_Y	P3
2	IO_L49N_Y	P2
2	IO_VREF_L50P_Y	R3[2]
2	IO_L50N_Y	R4
2	IO_L51P_YY	R1
2	IO_L51N_YY	T3
3	IO	AA2
3	IO	AC2
3	IO	AE2
3	IO	U3
3	IO	W1
3	IO_L52P_Y	U4
3	IO_VREF_L52N_Y	U2[2]
3	IO_L53P_Y	U1
3	IO_L53N_Y	V3
3	IO_D4_L54P_YY	V4
3	IO_VREF_L54N_YY	V2
3	IO_L55P_Y	W3
3	IO_L55N_Y	W4
3	IO_L56P_Y	Y1

Table 12: **BG432 — XCV300E, XCV400E, XCV600E**

Bank	Pin Description	Pin #
3	IO_L56N_Y	Y3
3	IO_L57P_Y	Y4
3	IO_L57N_Y	Y2
3	IO_L58P_YY	AA3
3	IO_D5_L58N_YY	AB1
3	IO_D6_L59P_YY	AB3
3	IO_VREF_L59N_YY	AB4
3	IO_L60P_Y	AD1
3	IO_VREF_L60N_Y	AC3[1]
3	IO_L61P_Y	AC4
3	IO_L61N_Y	AD2
3	IO_L62P_YY	AD3
3	IO_VREF_L62N_YY	AD4
3	IO_L63P_Y	AF2
3	IO_L63N_Y	AE3
3	IO_L64P	AE4
3	IO_L64N	AG1
3	IO_L65P_Y	AG2
3	IO_VREF_L65N_Y	AF3
3	IO_L66P_Y	AF4
3	IO_L66N_Y	AH1
3	IO_L67P	AH2
3	IO_L67N	AG3
3	IO_D7_L68P_YY	AG4
3	IO_INIT_L68N_YY	AJ2
3	IO	T2
4	GCK0	AL16
4	IO	AH10
4	IO	AJ11
4	IO	AK7
4	IO	AL12
4	IO	AL15
4	IO_L69P_YY	AJ4
4	IO_L69N_YY	AK3
4	IO_L70P_Y	AH5

Table 12: **BG432 — XCV300E, XCV400E, XCV600E**

Bank	Pin Description	Pin #
4	IO_L70N_Y	AK4
4	IO_L71P_YY	AJ5
4	IO_L71N_YY	AH6
4	IO_VREF_L72P_YY	AL4
4	IO_L72N_YY	AK5
4	IO_L73P_Y	AJ6
4	IO_L73N_Y	AH7
4	IO_L74P_YY	AL5
4	IO_L74N_YY	AK6
4	IO_VREF_L75P_YY	AJ7
4	IO_L75N_YY	AL6
4	IO_L76P_Y	AH9
4	IO_L76N_Y	AJ8
4	IO_VREF_L77P_Y	AK8[1]
4	IO_L77N_Y	AJ9
4	IO_VREF_L78P_YY	AL8
4	IO_L78N_YY	AK9
4	IO_L79P_YY	AK10
4	IO_L79N_YY	AL10
4	IO_L80P_YY	AH12
4	IO_L80N_YY	AK11
4	IO_L81P_YY	AJ12
4	IO_L81N_YY	AK12
4	IO_L82P_YY	AH13
4	IO_L82N_YY	AJ13
4	IO_VREF_L83P_YY	AL13
4	IO_L83N_YY	AK14
4	IO_L84P_Y	AH14
4	IO_L84N_Y	AJ14
4	IO_VREF_L85P_Y	AK15[2]
4	IO_L85N_Y	AJ15
4	IO_LVDS_DLL_L86P	AH15
5	GCK1	AK16
5	IO	AH20
5	IO	AJ19

Table 12: **BG432 — XCV300E, XCV400E, XCV600E**

Bank	Pin Description	Pin #
5	IO	AJ23
5	IO	AJ24
5	IO_LVDS_DLL_L86N	AL17
5	IO_L87P_Y	AK17
5	IO_VREF_L87N_Y	AJ17[2]
5	IO_L88P_Y	AH17
5	IO_L88N_Y	AK18
5	IO_L89P_YY	AL19
5	IO_VREF_L89N_YY	AJ18
5	IO_L90P_YY	AH18
5	IO_L90N_YY	AL20
5	IO_L91P_YY	AK20
5	IO_L91N_YY	AH19
5	IO_L92P_YY	AJ20
5	IO_L92N_YY	AK21
5	IO_L93P_YY	AJ21
5	IO_L93N_YY	AL22
5	IO_L94P_YY	AJ22
5	IO_VREF_L94N_YY	AK23
5	IO_L95P_Y	AH22
5	IO_VREF_L95N_Y	AL24[1]
5	IO_L96P_Y	AK24
5	IO_L96N_Y	AH23
5	IO_L97P_YY	AK25
5	IO_VREF_L97N_YY	AJ25
5	IO_L98P_YY	AL26
5	IO_L98N_YY	AK26
5	IO_L99P_Y	AH25
5	IO_L99N_Y	AL27
5	IO_L100P_YY	AJ26
5	IO_VREF_L100N_YY	AK27
5	IO_L101P_YY	AH26
5	IO_L101N_YY	AL28
5	IO_L102P_Y	AJ27
5	IO_L102N_Y	AK28

Table 12: **BG432 — XCV300E, XCV400E, XCV600E**

Bank	Pin Description	Pin #
6	IO	AA30
6	IO	AC30
6	IO	AD29
6	IO	U31
6	IO	W28
6	IO_L103N_YY	AJ30
6	IO_L103P_YY	AH30
6	IO_L104N	AG28
6	IO_L104P	AH31
6	IO_L105N_Y	AG29
6	IO_L105P_Y	AG30
6	IO_VREF_L106N_Y	AF28
6	IO_L106P_Y	AG31
6	IO_L107N	AF29
6	IO_L107P	AF30
6	IO_L108N_Y	AE28
6	IO_L108P_Y	AF31
6	IO_VREF_L109N_YY	AE30
6	IO_L109P_YY	AD28
6	IO_L110N_Y	AD30
6	IO_L110P_Y	AD31
6	IO_VREF_L111N_Y	AC28[1]
6	IO_L111P_Y	AC29
6	IO_VREF_L112N_YY	AB28
6	IO_L112P_YY	AB29
6	IO_L113N_YY	AB31
6	IO_L113P_YY	AA29
6	IO_L114N_Y	Y28
6	IO_L114P_Y	Y29
6	IO_L115N_Y	Y30
6	IO_L115P_Y	Y31
6	IO_L116N_Y	W29
6	IO_L116P_Y	W30
6	IO_VREF_L117N_YY	V28
6	IO_L117P_YY	V29
6	IO_L118N_Y	V30

Table 12: **BG432 — XCV300E, XCV400E, XCV600E**

Bank	Pin Description	Pin #
6	IO_L118P_Y	U29
6	IO_VREF_L119N_Y	U28[2]
6	IO_L119P_Y	U30
6	IO	T30
7	IO	C30
7	IO	H29
7	IO	H31
7	IO	L29
7	IO	M31
7	IO	R28
7	IO_L120N_YY	T31
7	IO_L120P_YY	R29
7	IO_L121N_Y	R30
7	IO_VREF_L121P_Y	R31[2]
7	IO_L122N_Y	P29
7	IO_L122P_Y	P28
7	IO_L123N_YY	P30
7	IO_VREF_L123P_YY	N30
7	IO_L124N_Y	N28
7	IO_L124P_Y	N31
7	IO_L125N_Y	M29
7	IO_L125P_Y	M28
7	IO_L126N_Y	M30
7	IO_L126P_Y	L30
7	IO_L127N_YY	K31
7	IO_L127P_YY	K30
7	IO_L128N_YY	K28
7	IO_VREF_L128P_YY	J30
7	IO_L129N_Y	J29
7	IO_VREF_L129P_Y	J28[1]
7	IO_L130N_Y	H30
7	IO_L130P_Y	G30
7	IO_L131N_YY	H28
7	IO_VREF_L131P_YY	F31
7	IO_L132N_Y	G29

Table 12: **BG432 — XCV300E, XCV400E, XCV600E**

Bank	Pin Description	Pin #
7	IO_L132P_Y	G28
7	IO_L133N	E31
7	IO_L133P	E30
7	IO_L134N_Y	F29
7	IO_VREF_L134P_Y	F28
7	IO_L135N_Y	D31
7	IO_L135P_Y	D30
7	IO_L136N	E29
7	IO_L136P	E28
2	CCLK	D4
3	DONE	AH4
NA	DXN	AH27
NA	DXP	AK29
NA	M0	AH28
NA	M1	AH29
NA	M2	AJ28
NA	PROGRAM	AH3
NA	TCK	D28
NA	TDI	B3
2	TDO	C4
NA	TMS	D29
NA	VCCINT	A10
NA	VCCINT	A17
NA	VCCINT	B23
NA	VCCINT	B26
NA	VCCINT	C7
NA	VCCINT	C14
NA	VCCINT	C19
NA	VCCINT	F1
NA	VCCINT	F30
NA	VCCINT	K3
NA	VCCINT	K29
NA	VCCINT	N2
NA	VCCINT	N29

Table 12: **BG432 — XCV300E, XCV400E, XCV600E**

Bank	Pin Description	Pin #
NA	VCCINT	T1
NA	VCCINT	T29
NA	VCCINT	W2
NA	VCCINT	W31
NA	VCCINT	AB2
NA	VCCINT	AB30
NA	VCCINT	AE29
NA	VCCINT	AF1
NA	VCCINT	AH8
NA	VCCINT	AH24
NA	VCCINT	AJ10
NA	VCCINT	AJ16
NA	VCCINT	AK22
NA	VCCINT	AK13
NA	VCCINT	AK19
0	VCCO	A21
0	VCCO	C29
0	VCCO	D21
1	VCCO	A1
1	VCCO	A11
1	VCCO	D11
2	VCCO	C3
2	VCCO	L4
2	VCCO	L1
3	VCCO	AA1
3	VCCO	AA4
3	VCCO	AJ3
4	VCCO	AH11
4	VCCO	AL1
4	VCCO	AL11
5	VCCO	AH21
5	VCCO	AL21
5	VCCO	AJ29
6	VCCO	AA28
6	VCCO	AA31

Table 12: **BG432 — XCV300E, XCV400E, XCV600E**

Bank	Pin Description	Pin #
6	VCCO	AL31
7	VCCO	A31
7	VCCO	L28
7	VCCO	L31
NA	GND	A2
NA	GND	A3
NA	GND	A7
NA	GND	A9
NA	GND	A14
NA	GND	A18
NA	GND	A23
NA	GND	A25
NA	GND	A29
NA	GND	A30
NA	GND	B1
NA	GND	B2
NA	GND	B30
NA	GND	B31
NA	GND	C1
NA	GND	C31
NA	GND	D16
NA	GND	G1
NA	GND	G31
NA	GND	J1
NA	GND	J31
NA	GND	P1
NA	GND	P31
NA	GND	T4
NA	GND	T28
NA	GND	V1
NA	GND	V31
NA	GND	AC1
NA	GND	AC31
NA	GND	AE1
NA	GND	AE31

Table 12: **BG432 — XCV300E, XCV400E, XCV600E**

Bank	Pin Description	Pin #
NA	GND	AH16
NA	GND	AJ1
NA	GND	AJ31
NA	GND	AK1
NA	GND	AK2
NA	GND	AK30
NA	GND	AK31
NA	GND	AL2
NA	GND	AL3
NA	GND	AL7
NA	GND	AL9
NA	GND	AL14
NA	GND	AL18
NA	GND	AL23
NA	GND	AL25
NA	GND	AL29
NA	GND	AL30

Notes:

1. V_{REF} or I/O option only in the XCV600E; otherwise, I/O option only.
2. V_{REF} or I/O option only in the XCV400E, XCV600E; otherwise, I/O option only.

BG432 Differential Pin Pairs

Virtex-E devices have differential pin pairs that can also Virtex-E devices have differential pin pairs that can also provide other functions when not used as a differential pair. A √ in the AO column indicates that the pin pair can be used as an asynchronous output for all devices provided in this package. Pairs with a note number in the AO column are device dependent. They can have asynchronous outputs if the pin pair are in the same CLB row and column in the device. Numbers in this column refer to footnotes that indicate which devices have pin pairs than can be asynchronous outputs. The Other Functions column indicates alternative function(s) not available when the pair is used as a differential pair or differential clock.

Table 13: **BG432 Differential Pin Pair Summary XCV300E, XCV400E, XC600E**

Pair	Bank	P Pin	N Pin	AO	Other Functions
Global Differential Clock					
0	4	AL16	AH15	NA	IO_DLL_L86P
1	5	AK16	AL17	NA	IO_DLL_L86N
2	1	A16	B16	NA	IO_DLL_L16P
3	0	D17	C17	NA	IO_DLL_L16N
IO LVDS Total Outputs: 137, Asynchronous Output Pairs: 63					
0	0	D27	B29	1	-
1	0	C27	B28	√	-
2	0	A28	D26	√	VREF
3	0	C26	B27	2	-
4	0	A27	D25	√	-
5	0	C25	D24	√	VREF
6	0	D23	B25	1	-
7	0	B24	C24	1	VREF
8	0	A24	D22	√	VREF
9	0	B22	C22	√	-
10	0	D20	C21	√	-
11	0	C20	B21	√	-
12	0	D19	A20	√	-
13	0	A19	B19	√	VREF
14	0	D18	B18	1	-
15	0	B17	C18	1	VREF

Table 13: **BG432 Differential Pin Pair Summary XCV300E, XCV400E, XC600E**

Pair	Bank	P Pin	N Pin	AO	Other Functions
16	1	B16	C17	NA	IO_LVDS_DLL
17	1	B15	A15	1	VREF
18	1	D15	C15	1	-
19	1	A13	B14	√	VREF
20	1	D14	B13	√	-
21	1	B12	C13	√	-
22	1	C12	D13	√	-
23	1	C11	D12	√	-
24	1	C10	B10	√	VREF
25	1	D10	C9	1	VREF
26	1	B8	A8	1	-
27	1	B7	C8	√	VREF
28	1	A6	D8	√	-
29	1	D7	B6	2	-
30	1	C6	A5	√	VREF
31	1	D6	B5	√	-
32	1	C5	A4	1	-
33	1	D5	B4	√	CS, WRITE
34	2	D3	C2	√	DIN, D0, BUSY
35	2	D2	E4	3	-
36	2	D1	E3	4	-
37	2	E2	F4	1	VREF
38	2	E1	F3	5	-
39	2	F2	G4	1	-
40	2	G3	G2	√	VREF
41	2	H3	H2	4	-
42	2	H1	J4	1	VREF
43	2	J2	K4	√	D1
44	2	K2	K1	√	D2
45	2	L2	M4	4	-
46	2	M3	M2	1	-
47	2	N4	N3	1	-

Table 13: **BG432 Differential Pin Pair Summary XCV300E, XCV400E, XC600E**

Pair	Bank	P Pin	N Pin	AO	Other Functions
48	2	N1	P4	√	D3
49	2	P3	P2	4	-
50	2	R3	R4	1	VREF
51	2	R1	T3	√	-
52	3	U4	U2	1	VREF
53	3	U1	V3	4	-
54	3	V4	V2	√	VREF
55	3	W3	W4	1	-
56	3	Y1	Y3	1	-
57	3	Y4	Y2	4	-
58	3	AA3	AB1	√	D5
59	3	AB3	AB4	√	VREF
60	3	AD1	AC3	1	VREF
61	3	AC4	AD2	4	-
62	3	AD3	AD4	√	VREF
63	3	AF2	AE3	1	-
64	3	AE4	AG1	5	-
65	3	AG2	AF3	1	VREF
66	3	AF4	AH1	4	-
67	3	AH2	AG3	3	-
68	3	AG4	AJ2	√	INIT
69	4	AJ4	AK3	√	-
70	4	AH5	AK4	1	-
71	4	AJ5	AH6	√	-
72	4	AL4	AK5	√	VREF
73	4	AJ6	AH7	2	-
74	4	AL5	AK6	√	-
75	4	AJ7	AL6	√	VREF
76	4	AH9	AJ8	1	-
77	4	AK8	AJ9	1	VREF
78	4	AL8	AK9	√	VREF
79	4	AK10	AL10	√	-

Table 13: **BG432 Differential Pin Pair Summary XCV300E, XCV400E, XC600E**

Pair	Bank	P Pin	N Pin	AO	Other Functions
80	4	AH12	AK11	√	-
81	4	AJ12	AK12	√	-
82	4	AH13	AJ13	√	-
83	4	AL13	AK14	√	VREF
84	4	AH14	AJ14	1	-
85	4	AK15	AJ15	1	VREF
86	5	AH15	AL17	NA	IO_LVDS_DLL
87	5	AK17	AJ17	1	VREF
88	5	AH17	AK18	1	-
89	5	AL19	AJ18	√	VREF
90	5	AH18	AL20	√	-
91	5	AK20	AH19	√	-
92	5	AJ20	AK21	√	-
93	5	AJ21	AL22	√	-
94	5	AJ22	AK23	√	VREF
95	5	AH22	AL24	1	VREF
96	5	AK24	AH23	1	-
97	5	AK25	AJ25	√	VREF
98	5	AL26	AK26	√	-
99	5	AH25	AL27	2	-
100	5	AJ26	AK27	√	VREF
101	5	AH26	AL28	√	-
102	5	AJ27	AK28	1	-
103	6	AH30	AJ30	√	-
104	6	AH31	AG28	3	-
105	6	AG30	AG29	4	-
106	6	AG31	AF28	1	VREF
107	6	AF30	AF29	5	-
108	6	AF31	AE28	1	-
109	6	AD28	AE30	√	VREF
110	6	AD31	AD30	4	-
111	6	AC29	AC28	1	VREF

Table 13: **BG432 Differential Pin Pair Summary XCV300E, XCV400E, XC600E**

Pair	Bank	P Pin	N Pin	AO	Other Functions
112	6	AB29	AB28	√	VREF
113	6	AA29	AB31	√	-
114	6	Y29	Y28	4	-
115	6	Y31	Y30	1	-
116	6	W30	W29	1	-
117	6	V29	V28	√	VREF
118	6	U29	V30	4	-
119	6	U30	U28	1	VREF
120	7	R29	T31	√	-
121	7	R31	R30	1	VREF
122	7	P28	P29	4	-
123	7	N30	P30	√	VREF
124	7	N31	N28	1	-
125	7	M28	M29	1	-
126	7	L30	M30	4	-
127	7	K30	K31	√	-
128	7	J30	K28	√	VREF
129	7	J28	J29	1	VREF
130	7	G30	H30	4	-
131	7	F31	H28	√	VREF
132	7	G28	G29	1	-
133	7	E30	E31	5	-
134	7	F28	F29	1	VREF
135	7	D30	D31	4	-
136	7	E28	E29	3	-

Notes:
1. AO in the XCV300E, 600E.
2. AO in the XCV300E.
3. AO in the XCV400E, 600E.
4. AO in the XCV300E, 400E.
5. AO in the XCV600E.

BG560 Ball Grid Array Packages

XCV1000E, XCV1600E, and XCV2000E devices in BG560 Ball Grid Array packages have footprint compatibility. Pins labeled I0_VREF can be used as either in all parts unless device-dependent as indicated in the footnotes. If the pin is not used as V_{REF}, it can be used as general I/O. Immediately following Table 14, see Table 15 for Differential Pair information.

Table 14: **BG560 — XCV400E, XCV600E, XCV1000E, XCV1600E, XCV2000E**

Bank	Pin Description	Pin#	See Note
0	GCK3	A17	
0	IO	A27	
0	IO	B25	
0	IO	C28	
0	IO	C30	
0	IO	D30	
0	IO_L0N	E28	
0	IO_VREF_L0P	D29	3
0	IO_L1N_YY	D28	
0	IO_L1P_YY	A31	
0	IO_VREF_L2N_YY	E27	
0	IO_L2P_YY	C29	
0	IO_L3N_Y	B30	
0	IO_L3P_Y	D27	
0	IO_L4N_YY	E26	
0	IO_L4P_YY	B29	
0	IO_VREF_L5N_YY	D26	
0	IO_L5P_YY	C27	
0	IO_L6N_Y	E25	
0	IO_VREF_L6P_Y	A28	1
0	IO_L7N_Y	D25	
0	IO_L7P_Y	C26	
0	IO_VREF_L8N_Y	E24	4
0	IO_L8P_Y	B26	
0	IO_L9N_Y	C25	
0	IO_L9P_Y	D24	
0	IO_VREF_L10N_YY	E23	
0	IO_L10P_YY	A25	
0	IO_L11N_YY	D23	

Table 14: **BG560 — XCV400E, XCV600E, XCV1000E, XCV1600E, XCV2000E**

Bank	Pin Description	Pin#	See Note
0	IO_L11P_YY	B24	
0	IO_L12N_Y	E22	
0	IO_L12P_Y	C23	
0	IO_L13N_YY	A23	
0	IO_L13P_YY	D22	
0	IO_VREF_L14N_YY	E21	3
0	IO_L14P_YY	B22	
0	IO_L15N_Y	D21	
0	IO_L15P_Y	C21	
0	IO_L16N_YY	B21	
0	IO_L16P_YY	E20	
0	IO_VREF_L17N_YY	D20	
0	IO_L17P_YY	C20	
0	IO_L18N_Y	B20	
0	IO_L18P_Y	E19	
0	IO_L19N_Y	D19	
0	IO_L19P_Y	C19	
0	IO_VREF_L20N_Y	A19	
0	IO_L20P_Y	D18	
0	IO_LVDS_DLL_L21N	C18	
0	IO_VREF	E18	2
1	GCK2	D17	
1	IO	A3	
1	IO	D9	
1	IO	E8	
1	IO	E11	
1	IO_LVDS_DLL_L21P	E17	
1	IO_VREF_L22N_Y	C17	2
1	IO_L22P_Y	B17	
1	IO_L23N_Y	B16	
1	IO_VREF_L23P_Y	D16	
1	IO_L24N_Y	E16	
1	IO_L24P_Y	C16	
1	IO_L25N_Y	A15	

Table 14: **BG560 — XCV400E, XCV600E, XCV1000E, XCV1600E, XCV2000E**

Bank	Pin Description	Pin#	See Note
1	IO_L25P_Y	C15	
1	IO_L26N_YY	D15	
1	IO_VREF_L26P_YY	E15	
1	IO_L27N_YY	C14	
1	IO_L27P_YY	D14	
1	IO_L28N_Y	A13	
1	IO_L28P_Y	E14	
1	IO_L29N_YY	C13	
1	IO_VREF_L29P_YY	D13	3
1	IO_L30N_YY	C12	
1	IO_L30P_YY	E13	
1	IO_L31N_Y	A11	
1	IO_L31P_Y	D12	
1	IO_L32N_YY	B11	
1	IO_L32P_YY	C11	
1	IO_L33N_YY	B10	
1	IO_VREF_L33P_YY	D11	
1	IO_L34N_Y	C10	
1	IO_L34P_Y	A9	
1	IO_L35N_Y	C9	
1	IO_VREF_L35P_Y	D10	4
1	IO_L36N_Y	A8	
1	IO_L36P_Y	B8	
1	IO_L37N_Y	E10	
1	IO_VREF_L37P_Y	C8	1
1	IO_L38N_YY	B7	
1	IO_VREF_L38P_YY	A6	
1	IO_L39N_YY	C7	
1	IO_L39P_YY	D8	
1	IO_L40N_Y	A5	
1	IO_L40P_Y	B5	
1	IO_L41N_YY	C6	
1	IO_VREF_L41P_YY	D7	
1	IO_L42N_YY	A4	
1	IO_L42P_YY	B4	

Table 14: **BG560 — XCV400E, XCV600E, XCV1000E, XCV1600E, XCV2000E**

Bank	Pin Description	Pin#	See Note
1	IO_L43N_Y	C5	
1	IO_VREF_L43P_Y	E7	3
1	IO_WRITE_L44N_YY	D6	
1	IO_CS_L44P_YY	A2	
2	IO	D3	
2	IO	F3	
2	IO	G1	
2	IO	J2	
2	IO_DOUT_BUSY_L45P_YY	D4	
2	IO_DIN_D0_L45N_YY	E4	
2	IO_L46P_Y	F5	
2	IO_VREF_L46N_Y	B3	3
2	IO_L47P_Y	F4	
2	IO_L47N_Y	C1	
2	IO_VREF_L48P_Y	G5	
2	IO_L48N_Y	E3	
2	IO_L49P_Y	D2	
2	IO_L49N_Y	G4	
2	IO_L50P_Y	H5	
2	IO_L50N_Y	E2	
2	IO_VREF_L51P_YY	H4	
2	IO_L51N_YY	G3	
2	IO_L52P_Y	J5	
2	IO_VREF_L52N_Y	F1	1
2	IO_L53P_Y	J4	
2	IO_L53N_Y	H3	
2	IO_VREF_L54P_Y	K5	4
2	IO_L54N_Y	H2	
2	IO_L55P_Y	J3	
2	IO_L55N_Y	K4	
2	IO_VREF_L56P_YY	L5	
2	IO_D1_L56N_YY	K3	
2	IO_D2_L57P_YY	L4	
2	IO_L57N_YY	K2	

Table 14: **BG560 — XCV400E, XCV600E, XCV1000E, XCV1600E, XCV2000E**

Bank	Pin Description	Pin#	See Note
2	IO_L58P_Y	M5	
2	IO_L58N_Y	L3	
2	IO_L59P_Y	L1	
2	IO_L59N_Y	M4	
2	IO_VREF_L60P_Y	N5	3
2	IO_L60N_Y	M2	
2	IO_L61P_Y	N4	
2	IO_L61N_Y	N3	
2	IO_L62P_Y	N2	
2	IO_L62N_Y	P5	
2	IO_VREF_L63P_YY	P4	
2	IO_D3_L63N_YY	P3	
2	IO_L64P_Y	P2	
2	IO_L64N_Y	R5	
2	IO_L65P_Y	R4	
2	IO_L65N_Y	R3	
2	IO_VREF_L66P_Y	R1	
2	IO_L66N_Y	T4	
2	IO_L67P_Y	T5	
2	IO_VREF_L67N_Y	T3	2
2	IO_L68P_YY	T2	
2	IO_L68N_YY	U3	
3	IO	AE3	
3	IO	AF3	
3	IO	AH3	
3	IO	AK3	
3	IO_VREF_L69P_Y	U1	2
3	IO_L69N_Y	U2	
3	IO_L70P_Y	V2	
3	IO_VREF_L70N_Y	V4	
3	IO_L71P_Y	V5	
3	IO_L71N_Y	V3	
3	IO_L72P_Y	W1	
3	IO_L72N_Y	W3	

Table 14: **BG560 — XCV400E, XCV600E, XCV1000E, XCV1600E, XCV2000E**

Bank	Pin Description	Pin#	See Note
3	IO_D4_L73P_YY	W4	
3	IO_VREF_L73N_YY	W5	
3	IO_L74P_Y	Y3	
3	IO_L74N_Y	Y4	
3	IO_L75P_Y	AA1	
3	IO_L75N_Y	Y5	
3	IO_L76P_Y	AA3	
3	IO_VREF_L76N_Y	AA4	3
3	IO_L77P_Y	AB3	
3	IO_L77N_Y	AA5	
3	IO_L78P_Y	AC1	
3	IO_L78N_Y	AB4	
3	IO_L79P_YY	AC3	
3	IO_D5_L79N_YY	AB5	
3	IO_D6_L80P_YY	AC4	
3	IO_VREF_L80N_YY	AD3	
3	IO_L81P_Y	AE1	
3	IO_L81N_Y	AC5	
3	IO_L82P_Y	AD4	
3	IO_VREF_L82N_Y	AF1	4
3	IO_L83P_Y	AF2	
3	IO_L83N_Y	AD5	
3	IO_L84P_Y	AG2	
3	IO_VREF_L84N_Y	AE4	1
3	IO_L85P_YY	AH1	
3	IO_VREF_L85N_YY	AE5	
3	IO_L86P_Y	AF4	
3	IO_L86N_Y	AJ1	
3	IO_L87P_Y	AJ2	
3	IO_L87N_Y	AF5	
3	IO_L88P_Y	AG4	
3	IO_VREF_L88N_Y	AK2	
3	IO_L89P_Y	AJ3	
3	IO_L89N_Y	AG5	
3	IO_L90P_Y	AL1	

Table 14: **BG560 — XCV400E, XCV600E, XCV1000E, XCV1600E, XCV2000E**

Bank	Pin Description	Pin#	See Note
3	IO_VREF_L90N_Y	AH4	3
3	IO_D7_L91P_YY	AJ4	
3	IO_INIT_L91N_YY	AH5	
3	IO	U4	
4	GCK0	AL17	
4	IO	AJ8	
4	IO	AJ11	
4	IO	AK6	
4	IO	AK9	
4	IO_L92P_YY	AL4	
4	IO_L92N_YY	AJ6	
4	IO_L93P_Y	AK5	
4	IO_VREF_L93N_Y	AN3	3
4	IO_L94P_YY	AL5	
4	IO_L94N_YY	AJ7	
4	IO_VREF_L95P_YY	AM4	
4	IO_L95N_YY	AM5	
4	IO_L96P_Y	AK7	
4	IO_L96N_Y	AL6	
4	IO_L97P_YY	AM6	
4	IO_L97N_YY	AN6	
4	IO_VREF_L98P_YY	AL7	
4	IO_L98N_YY	AJ9	
4	IO_L99P_Y	AN7	
4	IO_VREF_L99N_Y	AL8	1
4	IO_L100P_Y	AM8	
4	IO_L100N_Y	AJ10	
4	IO_VREF_L101P_Y	AL9	4
4	IO_L101N_Y	AM9	
4	IO_L102P_Y	AK10	
4	IO_L102N_Y	AN9	
4	IO_VREF_L103P_YY	AL10	
4	IO_L103N_YY	AM10	
4	IO_L104P_YY	AL11	

Table 14: **BG560 — XCV400E, XCV600E, XCV1000E, XCV1600E, XCV2000E**

Bank	Pin Description	Pin#	See Note
4	IO_L104N_YY	AJ12	
4	IO_L105P_Y	AN11	
4	IO_L105N_Y	AK12	
4	IO_L106P_YY	AL12	
4	IO_L106N_YY	AM12	
4	IO_VREF_L107P_YY	AK13	3
4	IO_L107N_YY	AL13	
4	IO_L108P_Y	AM13	
4	IO_L108N_Y	AN13	
4	IO_L109P_YY	AJ14	
4	IO_L109N_YY	AK14	
4	IO_VREF_L110P_YY	AM14	
4	IO_L110N_YY	AN15	
4	IO_L111P_Y	AJ15	
4	IO_L111N_Y	AK15	
4	IO_L112P_Y	AL15	
4	IO_L112N_Y	AM16	
4	IO_VREF_L113P_Y	AL16	
4	IO_L113N_Y	AJ16	
4	IO_L114P_Y	AK16	
4	IO_VREF_L114N_Y	AN17	2
4	IO_LVDS_DLL_L115P	AM17	
5	GCK1	AJ17	
5	IO	AL25	
5	IO	AL28	
5	IO	AL30	
5	IO	AN28	
5	IO_LVDS_DLL_L115N	AM18	
5	IO_VREF	AL18	2
5	IO_L116P_Y	AK18	
5	IO_VREF_L116N_Y	AJ18	
5	IO_L117P_Y	AN19	
5	IO_L117N_Y	AL19	
5	IO_L118P_Y	AK19	

Table 14: **BG560 — XCV400E, XCV600E, XCV1000E, XCV1600E, XCV2000E**

Bank	Pin Description	Pin#	See Note
5	IO_L118N_Y	AM20	
5	IO_L119P_YY	AJ19	
5	IO_VREF_L119N_YY	AL20	
5	IO_L120P_YY	AN21	
5	IO_L120N_YY	AL21	
5	IO_L121P_Y	AJ20	
5	IO_L121N_Y	AM22	
5	IO_L122P_YY	AK21	
5	IO_VREF_L122N_YY	AN23	3
5	IO_L123P_YY	AJ21	
5	IO_L123N_YY	AM23	
5	IO_L124P_Y	AK22	
5	IO_L124N_Y	AM24	
5	IO_L125P_YY	AL23	
5	IO_L125N_YY	AJ22	
5	IO_L126P_YY	AK23	
5	IO_VREF_L126N_YY	AL24	
5	IO_L127P_Y	AN26	
5	IO_L127N_Y	AJ23	
5	IO_L128P_Y	AK24	
5	IO_VREF_L128N_Y	AM26	4
5	IO_L129P_Y	AM27	
5	IO_L129N_Y	AJ24	
5	IO_L130P_Y	AL26	
5	IO_VREF_L130N_Y	AK25	1
5	IO_L131P_YY	AN29	
5	IO_VREF_L131N_YY	AJ25	
5	IO_L132P_YY	AK26	
5	IO_L132N_YY	AM29	
5	IO_L133P_Y	AM30	
5	IO_L133N_Y	AJ26	
5	IO_L134P_YY	AK27	
5	IO_VREF_L134N_YY	AL29	
5	IO_L135P_YY	AN31	
5	IO_L135N_YY	AJ27	

Table 14: **BG560 — XCV400E, XCV600E, XCV1000E, XCV1600E, XCV2000E**

Bank	Pin Description	Pin#	See Note
5	IO_L136P_Y	AM31	
5	IO_VREF_L136N_Y	AK28	3
6	IO	AE33	
6	IO	AF31	
6	IO	AJ32	
6	IO	AL33	
6	IO_L137N_YY	AH29	
6	IO_L137P_YY	AJ30	
6	IO_L138N_Y	AK31	
6	IO_VREF_L138P_Y	AH30	3
6	IO_L139N_Y	AG29	
6	IO_L139P_Y	AJ31	
6	IO_VREF_L140N_Y	AK32	
6	IO_L140P_Y	AG30	
6	IO_L141N_Y	AH31	
6	IO_L141P_Y	AF29	
6	IO_L142N_Y	AH32	
6	IO_L142P_Y	AF30	
6	IO_VREF_L143N_YY	AE29	
6	IO_L143P_YY	AH33	
6	IO_L144N_Y	AG33	
6	IO_VREF_L144P_Y	AE30	1
6	IO_L145N_Y	AD29	
6	IO_L145P_Y	AF32	
6	IO_VREF_L146N_Y	AE31	4
6	IO_L146P_Y	AD30	
6	IO_L147N_Y	AE32	
6	IO_L147P_Y	AC29	
6	IO_VREF_L148N_YY	AD31	
6	IO_L148P_YY	AC30	
6	IO_L149N_YY	AB29	
6	IO_L149P_YY	AC31	
6	IO_L150N_Y	AC33	
6	IO_L150P_Y	AB30	

Table 14: **BG560 — XCV400E, XCV600E, XCV1000E, XCV1600E, XCV2000E**

Bank	Pin Description	Pin#	See Note
6	IO_L151N_Y	AB31	
6	IO_L151P_Y	AA29	
6	IO_VREF_L152N_Y	AA30	3
6	IO_L152P_Y	AA31	
6	IO_L153N_Y	AA32	
6	IO_L153P_Y	Y29	
6	IO_L154N_Y	AA33	
6	IO_L154P_Y	Y30	
6	IO_VREF_L155N_YY	Y32	
6	IO_L155P_YY	W29	
6	IO_L156N_Y	W30	
6	IO_L156P_Y	W31	
6	IO_L157N_Y	W33	
6	IO_L157P_Y	V30	
6	IO_VREF_L158N_Y	V29	
6	IO_L158P_Y	V31	
6	IO_L159N_Y	V32	
6	IO_VREF_L159P_Y	U33	2
6	IO	U29	
7	IO	E30	
7	IO	F29	
7	IO	F33	
7	IO	G30	
7	IO	K30	
7	IO_L160N_YY	U31	
7	IO_L160P_YY	U32	
7	IO_VREF_L161N_Y	T32	2
7	IO_L161P_Y	T30	
7	IO_L162N_Y	T29	
7	IO_VREF_L162P_Y	T31	
7	IO_L163N_Y	R33	
7	IO_L163P_Y	R31	
7	IO_L164N_Y	R30	
7	IO_L164P_Y	R29	

Table 14: **BG560 — XCV400E, XCV600E, XCV1000E, XCV1600E, XCV2000E**

Bank	Pin Description	Pin#	See Note
7	IO_L165N_YY	P32	
7	IO_VREF_L165P_YY	P31	
7	IO_L166N_Y	P30	
7	IO_L166P_Y	P29	
7	IO_L167N_Y	M32	
7	IO_L167P_Y	N31	
7	IO_L168N_Y	N30	
7	IO_VREF_L168P_Y	L33	3
7	IO_L169N_Y	M31	
7	IO_L169P_Y	L32	
7	IO_L170N_Y	M30	
7	IO_L170P_Y	L31	
7	IO_L171N_YY	M29	
7	IO_L171P_YY	J33	
7	IO_L172N_YY	L30	
7	IO_VREF_L172P_YY	K31	
7	IO_L173N_Y	L29	
7	IO_L173P_Y	H33	
7	IO_L174N_Y	J31	
7	IO_VREF_L174P_Y	H32	4
7	IO_L175N_Y	K29	
7	IO_L175P_Y	H31	
7	IO_L176N_Y	J30	
7	IO_VREF_L176P_Y	G32	1
7	IO_L177N_YY	J29	
7	IO_VREF_L177P_YY	G31	
7	IO_L178N_Y	E33	
7	IO_L178P_Y	E32	
7	IO_L179N_Y	H29	
7	IO_L179P_Y	F31	
7	IO_L180N_Y	D32	
7	IO_VREF_L180P_Y	E31	
7	IO_L181N_Y	G29	
7	IO_L181P_Y	C33	
7	IO_L182N_Y	F30	

Table 14: **BG560 — XCV400E, XCV600E, XCV1000E, XCV1600E, XCV2000E**

Bank	Pin Description	Pin#	See Note
7	IO_VREF_L182P_Y	D31	3
2	CCLK	C4	
3	DONE	AJ5	
NA	DXN	AK29	
NA	DXP	AJ28	
NA	M0	AJ29	
NA	M1	AK30	
NA	M2	AN32	
NA	PROGRAM	AM1	
NA	TCK	E29	
NA	TDI	D5	
2	TDO	E6	
NA	TMS	B33	
NA	NC	C31	
NA	NC	AC2	
NA	NC	AK4	
NA	NC	AL3	
NA	VCCINT	A21	
NA	VCCINT	B12	
NA	VCCINT	B14	
NA	VCCINT	B18	
NA	VCCINT	B28	
NA	VCCINT	C22	
NA	VCCINT	C24	
NA	VCCINT	E9	
NA	VCCINT	E12	
NA	VCCINT	F2	
NA	VCCINT	H30	
NA	VCCINT	J1	
NA	VCCINT	K32	
NA	VCCINT	M3	
NA	VCCINT	N1	

Table 14: **BG560 — XCV400E, XCV600E, XCV1000E, XCV1600E, XCV2000E**

Bank	Pin Description	Pin#	See Note
NA	VCCINT	N29	
NA	VCCINT	N33	
NA	VCCINT	U5	
NA	VCCINT	U30	
NA	VCCINT	Y2	
NA	VCCINT	Y31	
NA	VCCINT	AB2	
NA	VCCINT	AB32	
NA	VCCINT	AD2	
NA	VCCINT	AD32	
NA	VCCINT	AG3	
NA	VCCINT	AG31	
NA	VCCINT	AJ13	
NA	VCCINT	AK8	
NA	VCCINT	AK11	
NA	VCCINT	AK17	
NA	VCCINT	AK20	
NA	VCCINT	AL14	
NA	VCCINT	AL22	
NA	VCCINT	AL27	
NA	VCCINT	AN25	
0	VCCO	A22	
0	VCCO	A26	
0	VCCO	A30	
0	VCCO	B19	
0	VCCO	B32	
1	VCCO	A10	
1	VCCO	A16	
1	VCCO	B13	
1	VCCO	C3	
1	VCCO	E5	
2	VCCO	B2	
2	VCCO	D1	
2	VCCO	H1	

Table 14: **BG560 — XCV400E, XCV600E, XCV1000E, XCV1600E, XCV2000E**

Bank	Pin Description	Pin#	See Note
2	VCCO	M1	
2	VCCO	R2	
3	VCCO	V1	
3	VCCO	AA2	
3	VCCO	AD1	
3	VCCO	AK1	
3	VCCO	AL2	
4	VCCO	AN4	
4	VCCO	AN8	
4	VCCO	AN12	
4	VCCO	AM2	
4	VCCO	AM15	
5	VCCO	AL31	
5	VCCO	AM21	
5	VCCO	AN18	
5	VCCO	AN24	
5	VCCO	AN30	
6	VCCO	W32	
6	VCCO	AB33	
6	VCCO	AF33	
6	VCCO	AK33	
6	VCCO	AM32	
7	VCCO	C32	
7	VCCO	D33	
7	VCCO	K33	
7	VCCO	N32	
7	VCCO	T33	
NA	GND	A1	
NA	GND	A7	
NA	GND	A12	
NA	GND	A14	
NA	GND	A18	
NA	GND	A20	
NA	GND	A24	

Table 14: **BG560 — XCV400E, XCV600E, XCV1000E, XCV1600E, XCV2000E**

Bank	Pin Description	Pin#	See Note
NA	GND	A29	
NA	GND	A32	
NA	GND	A33	
NA	GND	B1	
NA	GND	B6	
NA	GND	B9	
NA	GND	B15	
NA	GND	B23	
NA	GND	B27	
NA	GND	B31	
NA	GND	C2	
NA	GND	E1	
NA	GND	F32	
NA	GND	G2	
NA	GND	G33	
NA	GND	J32	
NA	GND	K1	
NA	GND	L2	
NA	GND	M33	
NA	GND	P1	
NA	GND	P33	
NA	GND	R32	
NA	GND	T1	
NA	GND	V33	
NA	GND	W2	
NA	GND	Y1	
NA	GND	Y33	
NA	GND	AB1	
NA	GND	AC32	
NA	GND	AD33	
NA	GND	AE2	
NA	GND	AG1	
NA	GND	AG32	
NA	GND	AH2	
NA	GND	AJ33	

Table 14: **BG560 — XCV400E, XCV600E, XCV1000E, XCV1600E, XCV2000E**

Bank	Pin Description	Pin#	See Note
NA	GND	AL32	
NA	GND	AM3	
NA	GND	AM7	
NA	GND	AM11	
NA	GND	AM19	
NA	GND	AM25	
NA	GND	AM28	
NA	GND	AM33	
NA	GND	AN1	
NA	GND	AN2	
NA	GND	AN5	
NA	GND	AN10	
NA	GND	AN14	
NA	GND	AN16	
NA	GND	AN20	
NA	GND	AN22	
NA	GND	AN27	
NA	GND	AN33	

Notes:

1. V_{REF} or I/O option only in the XCV2000E; otherwise, I/O option only.
2. V_{REF} or I/O option only in the XCV1600E & 2000E; otherwise, I/O option only.
3. V_{REF} or I/O option only in the XCV1000E, 1600E, & 2000E; otherwise, I/O option only.
4. V_{REF} or I/O option only in the XCV600E, 1000E, 1600E, & 2000E; otherwise, I/O option only.

BG560 Differential Pin Pairs

Virtex-E devices have differential pin pairs that can also provide other functions when not used as a differential pair. A √ in the AO column indicates that the pin pair can be used as an asynchronous output for all devices provided in this package. Pairs with a note number in the AO column are device dependent. They can have asynchronous outputs if the pin pair are in the same CLB row and column in the device. Numbers in this column refer to footnotes that indicate which devices have pin pairs than can be asynchronous outputs. The Other Functions column indicates alternative function(s) not available when the pair is used as a differential pair or differential clock.

Table 15: **BG560 Differential Pin Pair Summary XCV400E, XCV600E, XCV1000E, XCV1600E, XCV2000E**

Pair	Bank	P Pin	N Pin	AO	Other Functions
Global Differential Clock					
0	4	AL17	AM17	NA	IO_DLL_L15P
1	5	AJ17	AM18	NA	IO_DLL_L15N
2	1	D17	E17	NA	IO_DLL_L21P
3	0	A17	C18	NA	IO_DLL_L21N
IO LVDS Total Outputs: 183, Asynchronous Outputs: 87					
0	0	D29	E28	8	VREF
1	0	A31	D28	√	-
2	0	C29	E27	√	VREF
3	0	D27	B30	3	-
4	0	B29	E26	√	-
5	0	C27	D26	√	VREF
6	0	A28	E25	9	VREF
7	0	C26	D25	7	-
8	0	B26	E24	7	VREF
9	0	D24	C25	2	-
10	0	A25	E23	√	VREF
11	0	B24	D23	√	-
12	0	C23	E22	8	-
13	0	D22	A23	√	-
14	0	B22	E21	√	VREF
15	0	C21	D21	3	-

Table 15: **BG560 Differential Pin Pair Summary XCV400E, XCV600E, XCV1000E, XCV1600E, XCV2000E**

Pair	Bank	P Pin	N Pin	AO	Other Functions
16	0	E20	B21	√	-
17	0	C20	D20	√	VREF
18	0	E19	B20	9	-
19	0	C19	D19	7	-
20	0	D18	A19	7	VREF
21	1	E17	C18	NA	IO_LVDS_DLL
22	1	B17	C17	2	VREF
23	1	D16	B16	7	VREF
24	1	C16	E16	7	-
25	1	C15	A15	9	-
26	1	E15	D15	√	VREF
27	1	D14	C14	√	-
28	1	E14	A13	3	-
29	1	D13	C13	√	VREF
30	1	E13	C12	√	-
31	1	D12	A11	8	-
32	1	C11	B11	√	-
33	1	D11	B10	√	VREF
34	1	A9	C10	10	-
35	1	D10	C9	7	VREF
36	1	B8	A8	7	-
37	1	C8	E10	5	VREF
38	1	A6	B7	√	VREF
39	1	D8	C7	√	-
40	1	B5	A5	11	-
41	1	D7	C6	√	VREF
42	1	B4	A4	√	-
43	1	E7	C5	12	VREF
44	1	A2	D6	√	CS
45	2	D4	E4	√	DIN, D0
46	2	F5	B3	17	VREF

Table 15: **BG560 Differential Pin Pair Summary XCV400E, XCV600E, XCV1000E, XCV1600E, XCV2000E**

Pair	Bank	P Pin	N Pin	AO	Other Functions
47	2	F4	C1	14	-
48	2	G5	E3	15	VREF
49	2	D2	G4	16	-
50	2	H5	E2	15	-
51	2	H4	G3	√	VREF
52	2	J5	F1	17	VREF
53	2	J4	H3	14	-
54	2	K5	H2	18	VREF
55	2	J3	K4	19	-
56	2	L5	K3	√	D1
57	2	L4	K2	√	D2
58	2	M5	L3	17	-
59	2	L1	M4	14	-
60	2	N5	M2	15	VREF
61	2	N4	N3	16	-
62	2	N2	P5	15	-
63	2	P4	P3	√	D3
64	2	P2	R5	17	-
65	2	R4	R3	14	-
66	2	R1	T4	18	VREF
67	2	T5	T3	19	VREF
68	2	T2	U3	√	-
69	3	U1	U2	19	VREF
70	3	V2	V4	18	VREF
71	3	V5	V3	14	-
72	3	W1	W3	17	-
73	3	W4	W5	√	VREF
74	3	Y3	Y4	15	-
75	3	AA1	Y5	16	-
76	3	AA3	AA4	15	VREF
77	3	AB3	AA5	14	-

Table 15: **BG560 Differential Pin Pair Summary XCV400E, XCV600E, XCV1000E, XCV1600E, XCV2000E**

Pair	Bank	P Pin	N Pin	AO	Other Functions
78	3	AC1	AB4	17	-
79	3	AC3	AB5	√	D5
80	3	AC4	AD3	√	VREF
81	3	AE1	AC5	4	-
82	3	AD4	AF1	18	VREF
83	3	AF2	AD5	14	-
84	3	AG2	AE4	20	VREF
85	3	AH1	AE5	√	VREF
86	3	AF4	AJ1	15	-
87	3	AJ2	AF5	14	-
88	3	AG4	AK2	15	VREF
89	3	AJ3	AG5	14	-
90	3	AL1	AH4	14	VREF
91	3	AJ4	AH5	√	INIT
92	4	AL4	AJ6	√	-
93	4	AK5	AN3	8	VREF
94	4	AL5	AJ7	√	-
95	4	AM4	AM5	√	VREF
96	4	AK7	AL6	3	-
97	4	AM6	AN6	√	-
98	4	AL7	AJ9	√	VREF
99	4	AN7	AL8	9	VREF
100	4	AM8	AJ10	7	-
101	4	AL9	AM9	7	VREF
102	4	AK10	AN9	2	-
103	4	AL10	AM10	√	VREF
104	4	AL11	AJ12	√	-
105	4	AN11	AK12	8	-
106	4	AL12	AM12	√	-
107	4	AK13	AL13	√	VREF
108	4	AM13	AN13	3	-

Table 15: **BG560 Differential Pin Pair Summary XCV400E, XCV600E, XCV1000E, XCV1600E, XCV2000E**

Pair	Bank	P Pin	N Pin	AO	Other Functions
109	4	AJ14	AK14	√	-
110	4	AM14	AN15	√	VREF
111	4	AJ15	AK15	1	-
112	4	AL15	AM16	7	-
113	4	AL16	AJ16	7	VREF
114	4	AK16	AN17	2	VREF
115	5	AM17	AM18	NA	IO_LVDS_DLL
116	5	AK18	AJ18	7	VREF
117	5	AN19	AL19	7	-
118	5	AK19	AM20	9	-
119	5	AJ19	AL20	√	VREF
120	5	AN21	AL21	√	-
121	5	AJ20	AM22	3	-
122	5	AK21	AN23	√	VREF
123	5	AJ21	AM23	√	-
124	5	AK22	AM24	8	-
125	5	AL23	AJ22	√	-
126	5	AK23	AL24	√	VREF
127	5	AN26	AJ23	13	-
128	5	AK24	AM26	7	VREF
129	5	AM27	AJ24	√	-
130	5	AL26	AK25	5	VREF
131	5	AN29	AJ25	√	VREF
132	5	AK26	AM29	√	-
133	5	AM30	AJ26	11	-
134	5	AK27	AL29	√	VREF
135	5	AN31	AJ27	√	-
136	5	AM31	AK28	12	VREF
137	6	AJ30	AH29	√	-
138	6	AH30	AK31	17	VREF
139	6	AJ31	AG29	14	-

Table 15: **BG560 Differential Pin Pair Summary XCV400E, XCV600E, XCV1000E, XCV1600E, XCV2000E**

Pair	Bank	P Pin	N Pin	AO	Other Functions
140	6	AG30	AK32	15	VREF
141	6	AF29	AH31	16	-
142	6	AF30	AH32	15	-
143	6	AH33	AE29	√	VREF
144	6	AE30	AG33	17	VREF
145	6	AF32	AD29	14	-
146	6	AD30	AE31	18	VREF
147	6	AC29	AE32	19	-
148	6	AC30	AD31	√	VREF
149	6	AC31	AB29	√	-
150	6	AB30	AC33	17	-
151	6	AA29	AB31	14	-
152	6	AA31	AA30	15	VREF
153	6	Y29	AA32	16	-
154	6	Y30	AA33	15	-
155	6	W29	Y32	√	VREF
156	6	W31	W30	17	-
157	6	V30	W33	14	-
158	6	V31	V29	18	VREF
159	6	U33	V32	19	VREF
160	7	U32	U31	√	-
161	7	T30	T32	19	VREF
162	7	T31	T29	18	VREF
163	7	R31	R33	14	-
164	7	R29	R30	17	-
165	7	P31	P32	√	VREF
166	7	P29	P30	15	-
167	7	N31	M32	16	-
168	7	L33	N30	15	VREF
169	7	L32	M31	14	-
170	7	L31	M30	17	-

Table 15: **BG560 Differential Pin Pair Summary XCV400E, XCV600E, XCV1000E, XCV1600E, XCV2000E**

Pair	Bank	P Pin	N Pin	AO	Other Functions
171	7	J33	M29	√	-
172	7	K31	L30	√	VREF
173	7	H33	L29	4	-
174	7	H32	J31	18	VREF
175	7	H31	K29	14	-
176	7	G32	J30	20	VREF
177	7	G31	J29	√	VREF
178	7	E32	E33	15	-
179	7	F31	H29	14	-
180	7	E31	D32	15	VREF
181	7	C33	G29	14	-
182	7	D31	F30	14	VREF

Notes:
1. AO in the XCV1600E.
2. AO in the XCV2000E.
3. AO in the XCV1600E, 2000E.
4. AO in the XCV1000E, 1600E.
5. AO in the XCV1000E, 2000E.
6. AO in the XCV1000E.
7. AO in the XCV1000E, 1600E, 2000E.
8. AO in the XCV600E, 1600E.
9. AO in the XCV400E, 600E, 1600E.
10. AO in the XCV400E, 600E, 1000E, 2000E.
11. AO in the XCV400E, 600E, 1000E.
12. AO in the XCV400E, 1000E, 2000E.
13. AO in the XCV400E, 600E, 1000E, 1600E.
14. AO in the XCV400E, 1000E, 1600E.
15. AO in the XCV600E, 1000E, 2000E.
16. AO in the XCV600E, 2000E.
17. AO in the XCV400E, 600E, 1600E, 2000E.
18. AO in the XCV600E, 1000E, 1600E, 2000E.
19. AO in the XCV400E, 600E, 2000E.
20. AO in the XCV400E, 1000E.

FG256 Fine-Pitch Ball Grid Array Packages

XCV50E, XCV100E, XCV200E, and XCV300E devices in FG256 fine-pitch Ball Grid Array packages have footprint compatibility. Pins labeled I0_VREF can be used as either in all parts unless device-dependent as indicated in the footnotes. If the pin is not used as V_{REF}, it can be used as general I/O. Immediately following Table 16, see Table 17 for Differential Pair information.

Table 16: **FG256 Package — XCV50E, XCV100E, XCV200E, XCV300E**

Bank	Pin Description	Pin #
0	GCK3	B8
0	IO	B3
0	IO	E7
0	IO	D8
0	IO_L0N_Y	C5
0	IO_VREF_L0P_Y	A3[2]
0	IO_L1N_YY	D5
0	IO_L1P_YY	E6
0	IO_VREF_L2N_YY	B4
0	IO_L2P_YY	A4
0	IO_L3N_Y	D6
0	IO_L3P_Y	B5
0	IO_VREF_L4N_YY	C6[1]
0	IO_L4P_YY	A5
0	IO_L5N_YY	B6
0	IO_L5P_YY	C7
0	IO_L6N_Y	D7
0	IO_L6P_Y	C8
0	IO_VREF_L7N_Y	B7
0	IO_L7P_Y	A6
0	IO_LVDS_DLL_L8N	A7
1	GCK2	C9
1	IO	B10
1	IO_LVDS_DLL_L8P	A8
1	IO_L9N_Y	D9
1	IO_L9P_Y	A9
1	IO_L10N_Y	E10
1	IO_VREF_L10P_Y	B9

Table 16: **FG256 Package — XCV50E, XCV100E, XCV200E, XCV300E**

Bank	Pin Description	Pin #
1	IO_L11N_Y	A10
1	IO_L11P_Y	D10
1	IO_L12N_YY	C10
1	IO_L12P_YY	A11
1	IO_L13N_YY	B11
1	IO_VREF_L13P_YY	E11[1]
1	IO_L14N_Y	A12
1	IO_L14P_Y	D11
1	IO_L15N_YY	A13
1	IO_VREF_L15P_YY	C11
1	IO_L16N_YY	B12
1	IO_L16P_YY	D12
1	IO_VREF_L17N_Y	A14[2]
1	IO_L17P_Y	C12
1	IO_WRITE_L18N_YY	C13
1	IO_CS_L18P_YY	B13
2	IO_DOUT_BUSY_L19P_YY	C15
2	IO_DIN_D0_L19N_YY	D14
2	IO_L20P	B16
2	IO_VREF_L20N	E13[2]
2	IO_L21P_YY	C16
2	IO_L21N_YY	E14
2	IO_VREF_L22P_Y	F13
2	IO_L22N_Y	E15
2	IO_L23P	F12
2	IO_L23N	D16
2	IO_VREF_L24P_Y	F14[1]
2	IO_D1_L24N_Y	E16
2	IO_D2_L25P_YY	F15
2	IO_L25N_YY	G13
2	IO_L26P	F16
2	IO_L26N	G12
2	IO_L27P_YY	G15
2	IO_L27N_YY	G14

Table 16: **FG256 Package — XCV50E, XCV100E, XCV200E, XCV300E**

Bank	Pin Description	Pin #
2	IO_VREF_L28P_Y	H13
2	IO_D3_L28N_Y	G16
2	IO_L29P	J13
2	IO_L29N	H15
2	IO_L30P_YY	H14
2	IO_L30N_YY	H16
3	IO	J15
3	IO_L31P	K15
3	IO_L31N	J14
3	IO_D4_L32P_Y	J16
3	IO_VREF_L32N_Y	K16
3	IO_L33P_YY	K12
3	IO_L33N_YY	L15
3	IO_L34P	K13
3	IO_L34N	L16
3	IO_L35P_YY	K14
3	IO_D5_L35N_YY	M16
3	IO_D6_L36P_Y	N16
3	IO_VREF_L36N_Y	L13[1]
3	IO_L37P	P16
3	IO_L37N	L12
3	IO_L38P_Y	M15
3	IO_VREF_L38N_Y	L14
3	IO_L39P_YY	M14
3	IO_L39N_YY	R16
3	IO_VREF_L40P	M13[2]
3	IO_L40N	T15
3	IO_D7_L41P_YY	N14
3	IO_INIT_L41N_YY	N15
4	GCK0	N8
4	IO	P10
4	IO_L42P_YY	T14
4	IO_L42N_YY	P13

Table 16: **FG256 Package — XCV50E, XCV100E, XCV200E, XCV300E**

Bank	Pin Description	Pin #
4	IO_L43P_Y	P12
4	IO_VREF_L43N_Y	R13[2]
4	IO_L44P_YY	N12
4	IO_L44N_YY	T13
4	IO_VREF_L45P_YY	T12
4	IO_L45N_YY	P11
4	IO_L46P_Y	R12
4	IO_L46N_Y	N11
4	IO_VREF_L47P_YY	T11[1]
4	IO_L47N_YY	M11
4	IO_L48P_YY	R11
4	IO_L48N_YY	T10
4	IO_L49P_Y	R10
4	IO_L49N_Y	M10
4	IO_VREF_L50P_Y	P9
4	IO_L50N_Y	T9
4	IO_L51P_Y	N10
4	IO_L51N_Y	R9
4	IO_LVDS_DLL_L52P	N9
5	GCK1	R8
5	IO	N7
5	IO	T7
5	IO_LVDS_DLL_L52N	T8
5	IO_L53P_Y	R7
5	IO_VREF_L53N_Y	P8
5	IO_L54P_Y	P7
5	IO_L54N_Y	T6
5	IO_L55P_YY	M7
5	IO_L55N_YY	R6
5	IO_L56P_YY	P6
5	IO_VREF_L56N_YY	R5[1]
5	IO_L57P_Y	N6
5	IO_L57N_Y	T5
5	IO_L58P_YY	M6

Table 16: **FG256 Package — XCV50E, XCV100E, XCV200E, XCV300E**

Bank	Pin Description	Pin #
5	IO_VREF_L58N_YY	T4
5	IO_L59P_YY	T3
5	IO_L59N_YY	P5
5	IO_VREF_L60P_Y	T2[2]
5	IO_L60N_Y	N5
6	IO_L61N_YY	M3
6	IO_L61P_YY	R1
6	IO_L62N	M4
6	IO_VREF_L62P	N2[2]
6	IO_L63N_YY	L5
6	IO_L63P_YY	P1
6	IO_VREF_L64N_Y	N1
6	IO_L64P_Y	L3
6	IO_L65N	M2
6	IO_L65P	L4
6	IO_VREF_L66N_Y	M1[1]
6	IO_L66P_Y	K4
6	IO_L67N_YY	L2
6	IO_L67P_YY	L1
6	IO_L68N	K3
6	IO_L68P	K1
6	IO_L69N_YY	K2
6	IO_L69P_YY	K5
6	IO_VREF_L70N_Y	J3
6	IO_L70P_Y	J1
6	IO_L71N	J4
6	IO_L71P	H1
6	IO	J2
7	IO	C2
7	IO_L72N_YY	G1
7	IO_L72P_YY	H4
7	IO_L73N	G5
7	IO_L73P	H2

Table 16: **FG256 Package — XCV50E, XCV100E, XCV200E, XCV300E**

Bank	Pin Description	Pin #
7	IO_L74N_Y	G4
7	IO_VREF_L74P_Y	H3
7	IO_L75N_YY	G2
7	IO_L75P_YY	F5
7	IO_L76N	F4
7	IO_L76P	F1
7	IO_L77N_YY	G3
7	IO_L77P_YY	F2
7	IO_L78N_Y	E1
7	IO_VREF_L78P_Y	D1[1]
7	IO_L79N	E4
7	IO_L79P	E2
7	IO_L80N_Y	F3
7	IO_VREF_L80P_Y	C1
7	IO_L81N_YY	D2
7	IO_L81P_YY	E3
7	IO_VREF_L82N	B1[2]
7	IO_L82P	A2
2	CCLK	D15
3	DONE	R14
NA	DXN	R4
NA	DXP	P4
NA	M0	N3
NA	M1	P2
NA	M2	R3
NA	PROGRAM	P15
NA	TCK	C4
NA	TDI	A15
2	TDO	B14
NA	TMS	D3
NA	VCCINT	C3
NA	VCCINT	C14
NA	VCCINT	D4

Table 16: **FG256 Package — XCV50E, XCV100E, XCV200E, XCV300E**

Bank	Pin Description	Pin #
NA	VCCINT	D13
NA	VCCINT	E5
NA	VCCINT	E12
NA	VCCINT	M5
NA	VCCINT	M12
NA	VCCINT	N4
NA	VCCINT	N13
NA	VCCINT	P3
NA	VCCINT	P14
0	VCCO	F8
0	VCCO	E8
1	VCCO	F9
1	VCCO	E9
2	VCCO	H12
2	VCCO	H11
3	VCCO	J12
3	VCCO	J11
4	VCCO	M9
4	VCCO	L9
5	VCCO	M8
5	VCCO	L8
6	VCCO	J6
6	VCCO	J5
7	VCCO	H6
7	VCCO	H5
NA	GND	T16
NA	GND	T1
NA	GND	R15
NA	GND	R2
NA	GND	L11
NA	GND	L10
NA	GND	L7
NA	GND	L6

Table 16: **FG256 Package — XCV50E, XCV100E, XCV200E, XCV300E**

Bank	Pin Description	Pin #
NA	GND	K11
NA	GND	K10
NA	GND	K9
NA	GND	K8
NA	GND	K7
NA	GND	K6
NA	GND	J10
NA	GND	J9
NA	GND	J8
NA	GND	J7
NA	GND	H10
NA	GND	H9
NA	GND	H8
NA	GND	H7
NA	GND	G11
NA	GND	G10
NA	GND	G9
NA	GND	G8
NA	GND	G7
NA	GND	G6
NA	GND	F11
NA	GND	F10
NA	GND	F7
NA	GND	F6
NA	GND	B15
NA	GND	B2
NA	GND	A16
NA	GND	A1

Notes:
1. V_{REF} or I/O option only in the XCV100E, 200E, 300E; otherwise, I/O option only.
2. V_{REF} or I/O option only in the XCV200E, 300E; otherwise, I/O option only.

FG256 Differential Pin Pairs

Virtex-E devices have differential pin pairs that can also provide other functions when not used as a differential pair. A √ in the AO column indicates that the pin pair can be used as an asynchronous output for all devices provided in this package. Pairs with a note number in the AO column are device dependent. They can have asynchronous outputs if the pin pair are in the same CLB row and column in the device. Numbers in this column refer to footnotes that indicate which devices have pin pairs than can be asynchronous outputs. The Other Functions column indicates alternative function(s) not available when the pair is used as a differential pair or differential clock.

Table 17: **FG256 Differential Pin Pair Summary XCV50E, XCV100E, XCV200E, XCV300E**

Pair	Bank	P Pin	N Pin	AO	Other Functions
Global Differential Clock					
0	4	N8	N9	NA	IO_DLL_L52P
1	5	R8	T8	NA	IO_DLL_L52N
2	1	C9	A8	NA	IO_DLL_L8P
3	0	B8	A7	NA	IO_DLL_L8N
IO LVDS Total Pairs: 83, Asynchronous Outputs: 35					
0	0	A3	C5	7	VREF
1	0	E6	D5	√	-
2	0	A4	B4	√	VREF
3	0	B5	D6	2	-
4	0	A5	C6	√	VREF
5	0	C7	B6	√	-
6	0	C8	D7	1	-
7	0	A6	B7	1	VREF
8	1	A8	A7	NA	IO_LVDS_DLL
9	1	A9	D9	2	-
10	1	B9	E10	1	VREF
11	1	D10	A10	1	-
12	1	A11	C10	√	-
13	1	E11	B11	√	VREF
14	1	D11	A12	2	-
15	1	C11	A13	√	VREF
16	1	D12	B12	√	-
17	1	C12	A14	7	VREF
18	1	B13	C13	√	CS

Table 17: **FG256 Differential Pin Pair Summary XCV50E, XCV100E, XCV200E, XCV300E**

Pair	Bank	P Pin	N Pin	AO	Other Functions
19	2	C15	D14	√	DIN, D0
20	2	B16	E13	6	VREF
21	2	C16	E14	√	-
22	2	F13	E15	1	VREF
23	2	F12	D16	5	-
24	2	F14	E16	3	D1
25	2	F15	G13	√	D2
26	2	F16	G12	6	-
27	2	G15	G14	√	-
28	2	H13	G16	3	D3
29	2	J13	H15	4	-
30	2	H14	H16	√	-
31	3	K15	J14	4	-
32	3	J16	K16	3	VREF
33	3	K12	L15	√	-
34	3	K13	L16	6	-
35	3	K14	M16	√	D5
36	3	N16	L13	3	VREF
37	3	P16	L12	5	-
38	3	M15	L14	1	VREF
39	3	M14	R16	√	-
40	3	M13	T15	6	VREF
41	3	N14	N15	√	INIT
42	4	T14	P13	√	-
43	4	P12	R13	7	VREF
44	4	N12	T13	√	-
45	4	T12	P11	√	VREF
46	4	R12	N11	2	-
47	4	T11	M11	√	VREF
48	4	R11	T10	√	-
49	4	R10	M10	1	-
50	4	P9	T9	1	VREF
51	4	N10	R9	1	-
52	5	N9	T8	NA	IO_LVDS_DLL
53	5	R7	P8	1	VREF
54	5	P7	T6	1	-

Table 17: **FG256 Differential Pin Pair Summary XCV50E, XCV100E, XCV200E, XCV300E**

Pair	Bank	P Pin	N Pin	AO	Other Functions
55	5	M7	R6	√	-
56	5	P6	R5	√	VREF
57	5	N6	T5	2	-
58	5	M6	T4	√	VREF
59	5	T3	P5	√	-
60	5	T2	N5	7	VREF
61	6	R1	M3	√	-
62	6	N2	M4	6	VREF
63	6	P1	L5	√	-
64	6	L3	N1	1	VREF
65	6	L4	M2	5	-
66	6	K4	M1	3	VREF
67	6	L1	L2	√	-
68	6	K1	K3	6	-
69	6	K5	K2	√	-
70	6	J1	J3	3	VREF
71	6	H1	J4	4	-
72	7	H4	G1	√	-
73	7	H2	G5	4	-
74	7	H3	G4	3	VREF
75	7	F5	G2	√	-
76	7	F1	F4	6	-
77	7	F2	G3	√	-
78	7	D1	E1	3	VREF
79	7	E2	E4	5	-
80	7	C1	F3	1	VREF
81	7	E3	D2	√	-
82	7	A2	B1	6	VREF

Notes:
1. AO in the XCV50E, 200E, 300E.
2. AO in the XCV50E, 200E.
3. AO in the XCV50E, 300E.
4. AO in the XCV100E, 200E.
5. AO in the XCV200E.
6. AO in the XCV100E.
7. AO in the XCV50E.

FG456 Fine-Pitch Ball Grid Array Packages

XCV200E and XCV300E devices in FG456 fine-pitch Ball Grid Array packages have footprint compatibility. Pins labeled I0_VREF can be used as either in both devices provided in this package. If the pin is not used as V_{REF}, it can be used as general I/O. Immediately following Table 18, see Table 19 for Differential Pair information.

Table 18: **FG456 — XCV200E and XCV300E**

Bank	Pin Description	Pin #
0	GCK3	C11
0	IO	A2[1]
0	IO	A3
0	IO	A6[1]
0	IO	A10
0	IO	B5
0	IO	B9
0	IO	C5
0	IO	D8
0	IO	D10
0	IO	E11[1]
0	IO_L0N	D5
0	IO_L0P	B3
0	IO_VREF_L1N_YY	B4
0	IO_L1P_YY	E6
0	IO_L2N	A4
0	IO_L2P	E7
0	IO_VREF_L3N_YY	C6
0	IO_L3P_YY	D6
0	IO_L4N_Y	A5
0	IO_L4P_Y	B6
0	IO_L5N_Y	D7
0	IO_L5P_Y	C7
0	IO_VREF_L6N_YY	E8
0	IO_L6P_YY	B7
0	IO_L7N_YY	A7
0	IO_L7P_YY	E9
0	IO_L8N_Y	C8
0	IO_L8P_Y	B8
0	IO_L9N_Y	D9
0	IO_L9P_Y	A8

Table 18: **FG456 — XCV200E and XCV300E**

Bank	Pin Description	Pin #
0	IO_L10N	C9
0	IO_L10P	E10
0	IO_VREF_L11N_YY	A9
0	IO_L11P_YY	C10
0	IO_L12N_Y	F11
0	IO_L12P_Y	B10
0	IO_LVDS_DLL_L13N	B11
1	GCK2	A11
1	IO	A12[1]
1	IO	A14
1	IO	B16[1]
1	IO	B19
1	IO	E13
1	IO	E15
1	IO	E16
1	IO	E17[1]
1	IO_LVDS_DLL_L13P	D11
1	IO_L14N_Y	C12
1	IO_L14P_Y	D12
1	IO_L15N_Y	B12
1	IO_L15P_Y	A13
1	IO_L16N_YY	E12
1	IO_VREF_L16P_YY	B13
1	IO_L17N_YY	C13
1	IO_L17P_YY	D13
1	IO_L18N_Y	B14
1	IO_L18P_Y	C14
1	IO_L19N_Y	F12
1	IO_L19P_Y	A15
1	IO_L20N_YY	B15
1	IO_L20P_YY	C15
1	IO_L21N_YY	A16
1	IO_VREF_L21P_YY	E14
1	IO_L22N_Y	D14
1	IO_L22P_Y	C16
1	IO_L23N_Y	D15

Table 18: **FG456 — XCV200E and XCV300E**

Bank	Pin Description	Pin #
1	IO_L23P_Y	A17
1	IO_L24N_YY	B17
1	IO_VREF_L24P_YY	A18
1	IO_L25N_YY	D16
1	IO_L25P_YY	C17
1	IO_L26N_YY	B18
1	IO_VREF_L26P_YY	A19
1	IO_L27N_YY	D17
1	IO_L27P_YY	C18
1	IO_WRITE_L28N_YY	A20
1	IO_CS_L28P_YY	C19
2	IO	D18[1]
2	IO	E19[1]
2	IO	E20
2	IO	F20
2	IO	G21
2	IO	G22[1]
2	IO	J22
2	IO	L19[1]
2	IO_D3	K20
2	IO_DOUT_BUSY_L29P_YY	C21
2	IO_DIN_D0_L29N_YY	D20
2	IO_L30P_YY	C22
2	IO_L30N_YY	D21
2	IO_VREF_L31P_YY	D22
2	IO_L31N_YY	E21
2	IO_L32P_YY	E22
2	IO_L32N_YY	F18
2	IO_VREF_L33P_YY	F21
2	IO_L33N_YY	F19
2	IO_L34P_Y	F22
2	IO_L34N_Y	G19
2	IO_L35P_Y	G20
2	IO_L35N_Y	G18
2	IO_VREF_L36P_Y	H18
2	IO_D1_L36N_Y	H22

Table 18: **FG456 — XCV200E and XCV300E**

Bank	Pin Description	Pin #
2	IO_D2_L37P_YY	H20
2	IO_L37N_YY	H19
2	IO_L38P_YY	H21
2	IO_L38N_YY	J19
2	IO_L39P_YY	J18
2	IO_L39N_YY	J20
2	IO_L40P_Y	K18
2	IO_L40N_Y	J21
2	IO_L41P	K22
2	IO_VREF_L41N	K21
2	IO_L42P_Y	K19
2	IO_L42N_Y	L22
2	IO_L43P_YY	L21
2	IO_L43N_YY	L18
2	IO_L44P_YY	L17
2	IO_L44N_YY	L20
3	IO	M21[1]
3	IO	P22
3	IO	R20[1]
3	IO	R22
3	IO	T19
3	IO	U18[1]
3	IO	V20
3	IO	V21
3	IO	Y22[1]
3	IO_L45P_YY	M18
3	IO_L45N_YY	M20
3	IO_L46P_Y	M19
3	IO_L46N_Y	M17
3	IO_D4_L47P_Y	N22
3	IO_VREF_L47N_Y	N21
3	IO_L48P_YY	N20
3	IO_L48N_YY	N18
3	IO_L49P_YY	N19
3	IO_L49N_YY	P21
3	IO_L50P_YY	P20

Table 18: **FG456 — XCV200E and XCV300E**

Bank	Pin Description	Pin #
3	IO_L50N_YY	P19
3	IO_L51P_YY	P18
3	IO_D5_L51N_YY	R21
3	IO_D6_L52P_Y	T22
3	IO_VREF_L52N_Y	R19
3	IO_L53P_Y	U22
3	IO_L53N_Y	R18
3	IO_L54P_YY	T21
3	IO_L54N_YY	V22
3	IO_L55P_YY	T20
3	IO_VREF_L55N_YY	U21
3	IO_L56P_YY	W22
3	IO_L56N_YY	T18
3	IO_L57P_YY	U19
3	IO_VREF_L57N_YY	U20
3	IO_L58P_YY	W21
3	IO_L58N_YY	AA22
3	IO_D7_L59P_YY	Y21
3	IO_INIT_L59N_YY	V19
3	IO	M22
4	GCK0	W12
4	IO	W14
4	IO	Y13
4	IO	Y17
4	IO	AA16[1]
4	IO	AA19
4	IO	AB12[1]
4	IO	AB17
4	IO	AB21[1]
4	IO_L60P_YY	W18
4	IO_L60N_YY	AA20
4	IO_L61P	Y18
4	IO_L61N	V17
4	IO_VREF_L62P_YY	AB20
4	IO_L62N_YY	W17
4	IO_L63P	AA18

Table 18: **FG456 — XCV200E and XCV300E**

Bank	Pin Description	Pin #
4	IO_L63N	V16
4	IO_VREF_L64P_YY	AB19
4	IO_L64N_YY	AB18
4	IO_L65P_Y	W16
4	IO_L65N_Y	AA17
4	IO_L66P_Y	Y16
4	IO_L66N_Y	V15
4	IO_VREF_L67P_YY	AB16
4	IO_L67N_YY	Y15
4	IO_L68P_YY	AA15
4	IO_L68N_YY	AB15
4	IO_L69P_Y	W15
4	IO_L69N_Y	Y14
4	IO_L70P_Y	V14
4	IO_L70N_Y	AA14
4	IO_L71P	AB14
4	IO_L71N	V13
4	IO_VREF_L72P_YY	AA13
4	IO_L72N_YY	AB13
4	IO_L73P_Y	W13
4	IO_L73N_Y	AA12
4	IO_L74P_Y	Y12
4	IO_L74N_Y	V12
4	IO_LVDS_DLL_L75P	U12
5	IO	U11[1]
5	IO	V8
5	IO	W5
5	IO	AA3[1]
5	IO	AA9
5	IO	AA10
5	IO	AB4
5	IO	AB7[1]
5	IO	AB8
5	GCK1	Y11
5	IO_LVDS_DLL_L75N	AA11
5	IO_L76P_Y	AB11

Table 18: **FG456 — XCV200E and XCV300E**

Bank	Pin Description	Pin #
5	IO_L76N_Y	W11
5	IO_L77P_YY	V11
5	IO_VREF_L77N_YY	Y10
5	IO_L78P_YY	AB10
5	IO_L78N_YY	W10
5	IO_L79P_Y	V10
5	IO_L79N_Y	Y9
5	IO_L80P_Y	AB9
5	IO_L80N_Y	W9
5	IO_L81P_YY	V9
5	IO_L81N_YY	AA8
5	IO_L82P_YY	Y8
5	IO_VREF_L82N_YY	W8
5	IO_L83P_Y	W7
5	IO_L83N_Y	AA7
5	IO_L84P_Y	AB6
5	IO_L84N_Y	AA6
5	IO_L85P_YY	AB5
5	IO_VREF_L85N_YY	AA5
5	IO_L86P_YY	Y7
5	IO_L86N_YY	W6
5	IO_L87P_YY	AA4
5	IO_VREF_L87N_YY	Y6
5	IO_L88P_YY	V7
5	IO_L88N_YY	AB3
6	IO	M2[1]
6	IO	M5
6	IO	P4
6	IO	R3[1]
6	IO	T2
6	IO	T4
6	IO	U3[1]
6	IO	W2
6	IO	AA1[1]
6	IO_L89N_YY	W3
6	IO_L89P_YY	Y2

Table 18: **FG456 — XCV200E and XCV300E**

Bank	Pin Description	Pin #
6	IO_L90N_YY	V4
6	IO_L90P_YY	V3
6	IO_VREF_L91N_YY	Y1
6	IO_L91P_YY	U4
6	IO_L92N_YY	V2
6	IO_L92P_YY	W1
6	IO_VREF_L93N_YY	T3
6	IO_L93P_YY	U2
6	IO_L94N_Y	T5
6	IO_L94P_Y	V1
6	IO_L95N_Y	R5
6	IO_L95P_Y	U1
6	IO_VREF_L96N_Y	R4
6	IO_L96P_Y	T1
6	IO_L97N_YY	R2
6	IO_L97P_YY	P3
6	IO_L98N_YY	P5
6	IO_L98P_YY	R1
6	IO_L99N_YY	P2
6	IO_L99P_YY	N5
6	IO_L100N_Y	P1
6	IO_L100P_Y	N4
6	IO_L101N	N3
6	IO_VREF_L101P	N2
6	IO_L102N_Y	N1
6	IO_L102P_Y	M4
6	IO_L103N_YY	M3
6	IO_L103P_YY	M6
6	IO	M1
7	IO	B1
7	IO	C2[1]
7	IO	D1[1]
7	IO	E4
7	IO	F4
7	IO	G2[1]
7	IO	G4

Table 18: **FG456 — XCV200E and XCV300E**

Bank	Pin Description	Pin #
7	IO	J1
7	IO	J4
7	IO	L2[1]
7	IO_L104N_YY	L3
7	IO_L104P_YY	L4
7	IO_L105N_YY	L5
7	IO_L105P_YY	L1
7	IO_L106N_Y	L6
7	IO_L106P_Y	K2
7	IO_L107N_Y	K4
7	IO_VREF_L107P_Y	K3
7	IO_L108N_YY	K1
7	IO_L108P_YY	K5
7	IO_L109N_YY	J3
7	IO_L109P_YY	J2
7	IO_L110N_YY	J5
7	IO_L110P_YY	H1
7	IO_L111N_YY	H2
7	IO_L111P_YY	H3
7	IO_L112N_Y	G1
7	IO_VREF_L112P_Y	H4
7	IO_L113N_Y	F1
7	IO_L113P_Y	F2
7	IO_L114N_YY	H5
7	IO_L114P_YY	G3
7	IO_L115N_YY	E1
7	IO_VREF_L115P_YY	E2
7	IO_L116N_YY	F3
7	IO_L116P_YY	G5
7	IO_L117N_YY	E3
7	IO_VREF_L117P_YY	D2
7	IO_L118N_YY	F5
7	IO_L118P_YY	C1
2	CCLK	B22
3	DONE	Y19
NA	DXN	Y5

Table 18: **FG456 — XCV200E and XCV300E**

Bank	Pin Description	Pin #
NA	DXP	V6
NA	M0	AB2
NA	M1	U5
NA	M2	Y4
NA	PROGRAM	W20
NA	TCK	C4
NA	TDI	B20
2	TDO	A21
NA	TMS	D3
NA	NC	W19
NA	NC	W4
NA	NC	D19
NA	NC	D4
NA	VCCINT	E5
NA	VCCINT	E18
NA	VCCINT	F6
NA	VCCINT	F17
NA	VCCINT	G7
NA	VCCINT	G8
NA	VCCINT	G9
NA	VCCINT	G14
NA	VCCINT	G15
NA	VCCINT	H7
NA	VCCINT	G16
NA	VCCINT	H16
NA	VCCINT	J7
NA	VCCINT	J16
NA	VCCINT	P7
NA	VCCINT	P16
NA	VCCINT	R7
NA	VCCINT	R16
NA	VCCINT	T7
NA	VCCINT	T8
NA	VCCINT	T9
NA	VCCINT	T14

Table 18: **FG456 — XCV200E and XCV300E**

Bank	Pin Description	Pin #
NA	VCCINT	T15
NA	VCCINT	T16
NA	VCCINT	U6
NA	VCCINT	U17
NA	VCCINT	V5
NA	VCCINT	V18
NA	VCCO_7	L7
NA	VCCO_7	K7
NA	VCCO_7	K6
NA	VCCO_7	J6
NA	VCCO_7	H6
NA	VCCO_7	G6
NA	VCCO_6	N7
NA	VCCO_6	M7
NA	VCCO_6	T6
NA	VCCO_6	R6
NA	VCCO_6	P6
NA	VCCO_6	N6
NA	VCCO_5	U10
NA	VCCO_5	U9
NA	VCCO_5	U8
NA	VCCO_5	U7
NA	VCCO_5	T11
NA	VCCO_5	T10
NA	VCCO_4	U16
NA	VCCO_4	U15
NA	VCCO_4	U14
NA	VCCO_4	U13
NA	VCCO_4	T13
NA	VCCO_4	T12
NA	VCCO_3	T17
NA	VCCO_3	R17
NA	VCCO_3	P17
NA	VCCO_3	N17
NA	VCCO_3	N16
NA	VCCO_3	M16

Table 18: **FG456 — XCV200E and XCV300E**

Bank	Pin Description	Pin #
NA	VCCO_2	K17
NA	VCCO_2	J17
NA	VCCO_2	H17
NA	VCCO_2	G17
NA	VCCO_2	L16
NA	VCCO_2	K16
NA	VCCO_1	G13
NA	VCCO_1	G12
NA	VCCO_1	F16
NA	VCCO_1	F15
NA	VCCO_1	F14
NA	VCCO_1	F13
NA	VCCO_0	G11
NA	VCCO_0	G10
NA	VCCO_0	F10
NA	VCCO_0	F9
NA	VCCO_0	F8
NA	VCCO_0	F7
NA	GND	AB22
NA	GND	AB1
NA	GND	AA21
NA	GND	AA2
NA	GND	Y20
NA	GND	Y3
NA	GND	P14
NA	GND	P13
NA	GND	P12
NA	GND	P11
NA	GND	P10
NA	GND	P9
NA	GND	N14
NA	GND	N13
NA	GND	N12
NA	GND	N11
NA	GND	N10
NA	GND	N9

Table 18: **FG456 — XCV200E and XCV300E**

Bank	Pin Description	Pin #
NA	GND	M14
NA	GND	M13
NA	GND	M12
NA	GND	M11
NA	GND	M10
NA	GND	M9
NA	GND	L14
NA	GND	L13
NA	GND	L12
NA	GND	L11
NA	GND	L10
NA	GND	L9
NA	GND	K14
NA	GND	K13
NA	GND	K12
NA	GND	K11
NA	GND	K10
NA	GND	K9
NA	GND	J14
NA	GND	J13
NA	GND	J12
NA	GND	J11
NA	GND	J10
NA	GND	J9
NA	GND	C20
NA	GND	C3
NA	GND	B21
NA	GND	B2
NA	GND	A22
NA	GND	A1

Note 1: NC in the XCV200E device.

FG456 Differential Pin Pairs

Virtex-E devices have differential pin pairs that can also provide other functions when not used as a differential pair. A √ in the AO column indicates that the pin pair can be used as an asynchronous output for all devices provided in this package. Pairs with a note number in the AO column are device dependent. They can have asynchronous outputs if the pin pair are in the same CLB row and column in the device. Numbers in this column refer to footnotes that indicate which devices have pin pairs than can be asynchronous outputs. The Other Functions column indicates alternative function(s) not available when the pair is used as a differential pair or differential clock.

Table 19: **FG456 Differential Pin Pair Summary XCV200E, XCV300E**

Pair	Bank	P Pin	N Pin	AO	Other Functions
Global Differential Clock					
0	4	W12	U12	NA	IO_DLL_L75P
1	5	Y11	AA11	NA	IO_DLL_L75N
2	1	A11	D11	NA	IO_DLL_L13P
3	0	C11	B11	NA	IO_DLL_L13N
IO LVDS Total Pairs: 119, Asynchronous Output Pairs: 69					
0	0	B3	D5	NA	-
1	0	E6	B4	√	VREF
2	0	E7	A4	NA	-
3	0	D6	C6	√	VREF
4	0	B6	A5	1	-
5	0	C7	D7	1	-
6	0	B7	E8	√	VREF
7	0	E9	A7	√	-
8	0	B8	C8	1	-
9	0	A8	D9	1	-
10	0	E10	C9	NA	-
11	0	C10	A9	√	VREF
12	0	B10	F11	2	-
13	1	D11	B11	NA	IO_LVDS_DLL
14	1	D12	C12	2	-
15	1	A13	B12	2	-
16	1	B13	E12	√	VREF
17	1	D13	C13	√	-

Table 19: **FG456 Differential Pin Pair Summary XCV200E, XCV300E**

Pair	Bank	P Pin	N Pin	AO	Other Functions
18	1	C14	B14	2	-
19	1	A15	F12	2	-
20	1	C15	B15	√	-
21	1	E14	A16	√	VREF
22	1	C16	D14	2	-
23	1	A17	D15	2	-
24	1	A18	B17	√	VREF
25	1	C17	D16	√	-
26	1	A19	B18	√	VREF
27	1	C18	D17	√	-
28	1	C19	A20	√	CS
29	2	C21	D20	√	DIN, D0
30	2	C22	D21	√	-
31	2	D22	E21	√	VREF
32	2	E22	F18	√	-
33	2	F21	F19	√	VREF
34	2	F22	G19	2	-
35	2	G20	G18	1	-
36	2	H18	H22	2	D1, VREF
37	2	H20	H19	√	D2
38	2	H21	J19	√	-
39	2	J18	J20	√	-
40	2	K18	J21	2	-
41	2	K22	K21	1	VREF
42	2	K19	L22	2	-
43	2	L21	L18	√	-
44	2	L17	L20	√	-
45	3	M18	M20	√	-
46	3	M19	M17	2	-
47	3	N22	N21	2	VREF
48	3	N20	N18	√	-
49	3	N19	P21	√	-
50	3	P20	P19	√	-
51	3	P18	R21	√	D5
52	3	T22	R19	2	VREF

Table 19: **FG456 Differential Pin Pair Summary XCV200E, XCV300E**

Pair	Bank	P Pin	N Pin	AO	Other Functions
53	3	U22	R18	2	-
54	3	T21	V22	√	-
55	3	T20	U21	√	VREF
56	3	W22	T18	√	-
57	3	U19	U20	√	VREF
58	3	W21	AA22	√	-
59	3	Y21	V19	√	INIT
60	4	W18	AA20	√	-
61	4	Y18	V17	NA	-
62	4	AB20	W17	√	VREF
63	4	AA18	V16	NA	-
64	4	AB19	AB18	√	VREF
65	4	W16	AA17	1	-
66	4	Y16	V15	1	-
67	4	AB16	Y15	√	VREF
68	4	AA15	AB15	√	-
69	4	W15	Y14	1	-
70	4	V14	AA14	1	-
71	4	AB14	V13	NA	-
72	4	AA13	AB13	√	VREF
73	4	W13	AA12	2	-
74	4	Y12	V12	2	-
75	5	U12	AA11	NA	IO_LVDS_DLL
76	5	AB11	W11	1	-
77	5	V11	Y10	√	VREF
78	5	AB10	W10	√	-
79	5	V10	Y9	2	-
80	5	AB9	W9	2	-
81	5	V9	AA8	√	-
82	5	Y8	W8	√	VREF
83	5	W7	AA7	2	-
84	5	AB6	AA6	2	-
85	5	AB5	AA5	√	VREF
86	5	Y7	W6	√	-
87	5	AA4	Y6	√	VREF

Table 19: **FG456 Differential Pin Pair Summary XCV200E, XCV300E**

Pair	Bank	P Pin	N Pin	AO	Other Functions
88	5	V7	AB3	√	-
89	6	Y2	W3	√	-
90	6	V3	V4	√	-
91	6	U4	Y1	√	VREF
92	6	W1	V2	√	-
93	6	U2	T3	√	VREF
94	6	V1	T5	2	-
95	6	U1	R5	1	-
96	6	T1	R4	2	VREF
97	6	P3	R2	√	-
98	6	R1	P5	√	-
99	6	N5	P2	√	-
100	6	N4	P1	2	-
101	6	N2	N3	1	VREF
102	6	M4	N1	2	-
103	6	M6	M3	√	-
104	7	L4	L3	√	-
105	7	L1	L5	√	-
106	7	K2	L6	2	-
107	7	K3	K4	2	VREF
108	7	K5	K1	√	-
109	7	J2	J3	√	-
110	7	H1	J5	√	-
111	7	H3	H2	√	-
112	7	H4	G1	2	VREF
113	7	F2	F1	2	-
114	7	G3	H5	√	-
115	7	E2	E1	√	VREF
116	7	G5	F3	√	-
117	7	D2	E3	√	VREF
118	7	C1	F5	√	-

Notes:
1. AO in the XCV200E.
2. AO in the XCV300E.

FG676 Fine-Pitch Ball Grid Array Package

XCV400E and XCV600E devices in the FG676 fine-pitch Ball Grid Array package have footprint compatibility. Pins labeled I0_VREF can be used as either in all parts unless device-dependent as indicated in the footnotes. If the pin is not used as V_{REF}, it can be used as general I/O. Immediately following Table 20, see Table 21 for Differential Pair information.

Table 20: **FG676 — XCV400E, XCV600E**

Bank	Pin Description	Pin #
0	GCK3	E13
0	IO	A6
0	IO	A9[1]
0	IO	A10[1]
0	IO	B3
0	IO	B4[1]
0	IO	B12[1]
0	IO	C6
0	IO	C8
0	IO	D5
0	IO	D13[1]
0	IO	G13
0	IO_L0N_Y	C4
0	IO_L0P_Y	F7
0	IO_L1N_YY	G8
0	IO_L1P_YY	C5
0	IO_VREF_L2N_YY	D6
0	IO_L2P_YY	E7
0	IO_L3N	A4
0	IO_L3P	F8
0	IO_L4N	B5
0	IO_L4P	D7
0	IO_VREF_L5N_YY	E8
0	IO_L5P_YY	G9
0	IO_L6N_YY	A5
0	IO_L6P_YY	F9
0	IO_L7N_Y	D8
0	IO_L7P_Y	C7
0	IO_VREF_L8N_Y	B7[2]
0	IO_L8P_Y	E9

Table 20: **FG676 — XCV400E, XCV600E**

Bank	Pin Description	Pin #
0	IO_L9N	A7
0	IO_L9P	D9
0	IO_L10N	B8
0	IO_VREF_L10P	G10
0	IO_L11N_YY	C9
0	IO_L11P_YY	F10
0	IO_L12N_Y	A8
0	IO_L12P_Y	E10
0	IO_L13N_YY	G11
0	IO_L13P_YY	D10
0	IO_L14N_YY	B10
0	IO_L14P_YY	F11
0	IO_L15N	C10
0	IO_L15P	E11
0	IO_L16N_YY	G12
0	IO_L16P_YY	D11
0	IO_VREF_L17N_YY	C11
0	IO_L17P_YY	F12
0	IO_L18N_YY	A11
0	IO_L18P_YY	E12
0	IO_L19N_Y	D12
0	IO_L19P_Y	C12
0	IO_VREF_L20N_Y	A12
0	IO_L20P_Y	H13
0	IO_LVDS_DLL_L21N	B13
1	GCK2	C13
1	IO	A13[1]
1	IO	A16[1]
1	IO	A19
1	IO	A20
1	IO	A22
1	IO	A24[1]
1	IO	B15[1]
1	IO	B17[1]
1	IO	B23
1	IO_LVDS_DLL_L21P	F14

Table 20: **FG676 — XCV400E, XCV600E**

Bank	Pin Description	Pin #
1	IO_L22N	E14
1	IO_L22P	F13
1	IO_L23N_Y	D14
1	IO_VREF_L23P_Y	A14
1	IO_L24N_Y	C14
1	IO_L24P_Y	H14
1	IO_L25N_YY	G14
1	IO_L25P_YY	C15
1	IO_L26N_YY	E15
1	IO_VREF_L26P_YY	D15
1	IO_L27N_YY	C16
1	IO_L27P_YY	F15
1	IO_L28N	G15
1	IO_L28P	D16
1	IO_L29N_YY	E16
1	IO_L29P_YY	A17
1	IO_L30N_YY	C17
1	IO_L30P_YY	E17
1	IO_L31N_Y	F16
1	IO_L31P_Y	D17
1	IO_L32N_YY	F17
1	IO_L32P_YY	C18
1	IO_L33N_YY	A18
1	IO_VREF_L33P_YY	G16
1	IO_L34N_YY	C19
1	IO_L34P_YY	G17
1	IO_L35N_Y	D18
1	IO_VREF_L35P_Y	B19[2]
1	IO_L36N_Y	D19
1	IO_L36P_Y	E18
1	IO_L37N_YY	F18
1	IO_L37P_YY	B20
1	IO_L38N_YY	G19
1	IO_VREF_L38P_YY	C20
1	IO_L39N_YY	G18
1	IO_L39P_YY	E19
1	IO_L40N_YY	A21

Table 20: **FG676 — XCV400E, XCV600E**

Bank	Pin Description	Pin #
1	IO_L40P_YY	D20
1	IO_L41N_YY	F19
1	IO_VREF_L41P_YY	C21
1	IO_L42N_YY	B22
1	IO_L42P_YY	E20
1	IO_L43N_Y	A23
1	IO_L43P_Y	D21
1	IO_WRITE_L44N_YY	C22
1	IO_CS_L44P_YY	E21
2	IO	D25[1]
2	IO	D26
2	IO	E26
2	IO	F26
2	IO	H26[1]
2	IO	K26[1]
2	IO	M25[1]
2	IO	N26[1]
2	IO_D1	K24
2	IO_DOUT_BUSY_L45P_YY	E23
2	IO_DIN_D0_L45N_YY	F22
2	IO_L46P_YY	E24
2	IO_L46N_YY	F20
2	IO_L47P_Y	G21
2	IO_L47N_Y	G22
2	IO_VREF_L48P_Y	F24
2	IO_L48N_Y	H20
2	IO_L49P_Y	E25
2	IO_L49N_Y	H21
2	IO_L50P_YY	F23
2	IO_L50N_YY	G23
2	IO_VREF_L51P_YY	H23
2	IO_L51N_YY	J20
2	IO_L52P_YY	G24
2	IO_L52N_YY	H22
2	IO_L53P_Y	J21
2	IO_L53N_Y	G25

Table 20: **FG676 — XCV400E, XCV600E**

Bank	Pin Description	Pin #
2	IO_VREF_L54P_Y	G26[2]
2	IO_L54N_Y	J22
2	IO_L55P_YY	H24
2	IO_L55N_YY	J23
2	IO_L56P_YY	J24
2	IO_VREF_L56N_YY	K20
2	IO_D2_L57P_YY	K22
2	IO_L57N_YY	K21
2	IO_L58P_YY	H25
2	IO_L58N_YY	K23
2	IO_L59P_Y	L20
2	IO_L59N_Y	J26
2	IO_L60P_Y	K25
2	IO_L60N_Y	L22
2	IO_L61P_Y	L21
2	IO_L61N_Y	L23
2	IO_L62P_Y	M20
2	IO_L62N_Y	L24
2	IO_VREF_L63P_YY	M23
2	IO_D3_L63N_YY	M22
2	IO_L64P_YY	L26
2	IO_L64N_YY	M21
2	IO_L65P_Y	N19
2	IO_L65N_Y	M24
2	IO_VREF_L66P_Y	M26
2	IO_L66N_Y	N20
2	IO_L67P_YY	N24
2	IO_L67N_YY	N21
2	IO_L68P_YY	N23
2	IO_L68N_YY	N22
3	IO	P24
3	IO	P26[1]
3	IO	R26[1]
3	IO	T26[1]
3	IO	U26[1]
3	IO	W25

Table 20: **FG676 — XCV400E, XCV600E**

Bank	Pin Description	Pin #
3	IO	Y26
3	IO	AB25
3	IO	AC25[1]
3	IO	AC26
3	IO_L69P_YY	P21
3	IO_L69N_YY	P23
3	IO_L70P_Y	P22
3	IO_VREF_L70N_Y	R25
3	IO_L71P_Y	P19
3	IO_L71N_Y	P20
3	IO_L72P_YY	R21
3	IO_L72N_YY	R22
3	IO_D4_L73P_YY	R24
3	IO_VREF_L73N_YY	R23
3	IO_L74P_Y	T24
3	IO_L74N_Y	R20
3	IO_L75P_Y	T22
3	IO_L75N_Y	U24
3	IO_L76P_Y	T23
3	IO_L76N_Y	U25
3	IO_L77P_Y	T21
3	IO_L77N_Y	U20
3	IO_L78P_YY	U22
3	IO_L78N_YY	V26
3	IO_L79P_YY	T20
3	IO_D5_L79N_YY	U23
3	IO_D6_L80P_YY	V24
3	IO_VREF_L80N_YY	U21
3	IO_L81P_YY	V23
3	IO_L81N_YY	W24
3	IO_L82P_Y	V22
3	IO_VREF_L82N_Y	W26[2]
3	IO_L83P_Y	Y25
3	IO_L83N_Y	V21
3	IO_L84P_YY	V20
3	IO_L84N_YY	AA26
3	IO_L85P_YY	Y24

Table 20: **FG676 — XCV400E, XCV600E**

Bank	Pin Description	Pin #
3	IO_VREF_L85N_YY	W23
3	IO_L86P_Y	AA24
3	IO_L86N_Y	Y23
3	IO_L87P_Y	AB26
3	IO_L87N_Y	W21
3	IO_L88P_Y	Y22
3	IO_VREF_L88N_Y	W22
3	IO_L89P_Y	AA23
3	IO_L89N_Y	AB24
3	IO_L90P_YY	W20
3	IO_L90N_YY	AC24
3	IO_D7_L91P_YY	AB23
3	IO_INIT_L91N_YY	Y21
4	GCK0	AA14
4	IO	AC18
4	IO	AE15[1]
4	IO	AE20
4	IO	AE23
4	IO	AF14[1]
4	IO	AF16[1]
4	IO	AF18[1]
4	IO	AF21
4	IO	AF23[1]
4	IO_L92P_YY	AC22
4	IO_L92N_YY	AD26
4	IO_L93P_Y	AD23
4	IO_L93N_Y	AA20
4	IO_L94P_YY	Y19
4	IO_L94N_YY	AC21
4	IO_VREF_L95P_YY	AD22
4	IO_L95N_YY	AB20
4	IO_L96P	AE22
4	IO_L96N	Y18
4	IO_L97P	AF22
4	IO_L97N	AA19
4	IO_VREF_L98P_YY	AD21

Table 20: **FG676 — XCV400E, XCV600E**

Bank	Pin Description	Pin #
4	IO_L98N_YY	AB19
4	IO_L99P_YY	AC20
4	IO_L99N_YY	AA18
4	IO_L100P_Y	AC19
4	IO_L100N_Y	AD20
4	IO_VREF_L101P_Y	AF20[2]
4	IO_L101N_Y	AB18
4	IO_L102P	AD19
4	IO_L102N	Y17
4	IO_L103P	AE19
4	IO_VREF_L103N	AD18
4	IO_L104P_YY	AF19
4	IO_L104N_YY	AA17
4	IO_L105P_Y	AC17
4	IO_L105N_Y	AB17
4	IO_L106P_YY	Y16
4	IO_L106N_YY	AE17
4	IO_L107P_YY	AF17
4	IO_L107N_YY	AA16
4	IO_L108P	AD17
4	IO_L108N	AB16
4	IO_L109P_YY	AC16
4	IO_L109N_YY	AD16
4	IO_VREF_L110P_YY	AC15
4	IO_L110N_YY	Y15
4	IO_L111P_YY	AD15
4	IO_L111N_YY	AA15
4	IO_L112P_Y	W14
4	IO_L112N_Y	AB15
4	IO_VREF_L113P_Y	AF15
4	IO_L113N_Y	Y14
4	IO_L114P	AD14
4	IO_L114N	AB14
4	IO_LVDS_DLL_L115P	AC14
5	GCK1	AB13
5	IO	Y13[1]

Table 20: **FG676 — XCV400E, XCV600E**

Bank	Pin Description	Pin #
5	IO	AD7
5	IO	AD13
5	IO	AE4
5	IO	AE7
5	IO	AE12[1]
5	IO	AF3[1]
5	IO	AF5
5	IO	AF10[1]
5	IO	AF11[1]
5	IO_LVDS_DLL_L115N	AF13
5	IO_L116P_Y	AA13
5	IO_VREF_L116N_Y	AF12
5	IO_L117P_Y	AC13
5	IO_L117N_Y	W13
5	IO_L118P_YY	AA12
5	IO_L118N_YY	AD12
5	IO_L119P_YY	AC12
5	IO_VREF_L119N_YY	AB12
5	IO_L120P_YY	AD11
5	IO_L120N_YY	Y12
5	IO_L121P	AB11
5	IO_L121N	AD10
5	IO_L122P_YY	AC11
5	IO_L122N_YY	AE10
5	IO_L123P_YY	AC10
5	IO_L123N_YY	AA11
5	IO_L124P_Y	Y11
5	IO_L124N_Y	AD9
5	IO_L125P_YY	AB10
5	IO_L125N_YY	AF9
5	IO_L126P_YY	AD8
5	IO_VREF_L126N_YY	AA10
5	IO_L127P_YY	AE8
5	IO_L127N_YY	Y10
5	IO_L128P_Y	AC9
5	IO_VREF_L128N_Y	AF8[2]
5	IO_L129P_Y	AF7

Table 20: **FG676 — XCV400E, XCV600E**

Bank	Pin Description	Pin #
5	IO_L129N_Y	AB9
5	IO_L130P_YY	AA9
5	IO_L130N_YY	AF6
5	IO_L131P_YY	AC8
5	IO_VREF_L131N_YY	AC7
5	IO_L132P_YY	AD6
5	IO_L132N_YY	Y9
5	IO_L133P_YY	AE5
5	IO_L133N_YY	AA8
5	IO_L134P_YY	AC6
5	IO_VREF_L134N_YY	AB8
5	IO_L135P_YY	AD5
5	IO_L135N_YY	AA7
5	IO_L136P_Y	AF4
5	IO_L136N_Y	AC5
6	IO	P3
6	IO	AA3
6	IO	AC1[1]
6	IO	P1[1]
6	IO	R2[1]
6	IO	T1[1]
6	IO	V1[1]
6	IO	W3
6	IO	Y2
6	IO	Y6
6	IO_L137N_YY	AA5
6	IO_L137P_YY	AC3
6	IO_L138N_YY	AC2
6	IO_L138P_YY	AB4
6	IO_L139N_Y	W6
6	IO_L139P_Y	AA4
6	IO_VREF_L140N_Y	AB3
6	IO_L140P_Y	Y5
6	IO_L141N_Y	AB2
6	IO_L141P_Y	V7
6	IO_L142N_YY	AB1

Table 20: **FG676 — XCV400E, XCV600E**

Bank	Pin Description	Pin #
6	IO_L142P_YY	Y4
6	IO_VREF_L143N_YY	V5
6	IO_L143P_YY	W5
6	IO_L144N_YY	AA1
6	IO_L144P_YY	V6
6	IO_L145N_Y	W4
6	IO_L145P_Y	Y3
6	IO_VREF_L146N_Y	Y1[2]
6	IO_L146P_Y	U7
6	IO_L147N_YY	W1
6	IO_L147P_YY	V4
6	IO_L148N_YY	W2
6	IO_VREF_L148P_YY	U6
6	IO_L149N_YY	V3
6	IO_L149P_YY	T5
6	IO_L150N_YY	U5
6	IO_L150P_YY	U4
6	IO_L151N_Y	T7
6	IO_L151P_Y	U3
6	IO_L152N_Y	U2
6	IO_L152P_Y	T6
6	IO_L153N_Y	U1
6	IO_L153P_Y	T4
6	IO_L154N_Y	R7
6	IO_L154P_Y	T3
6	IO_VREF_L155N_YY	R4
6	IO_L155P_YY	R6
6	IO_L156N_YY	R3
6	IO_L156P_YY	R5
6	IO_L157N_Y	P8
6	IO_L157P_Y	P7
6	IO_VREF_L158N_Y	R1
6	IO_L158P_Y	P6
6	IO_L159N_YY	P5
6	IO_L159P_YY	P4
7	IO	D1[1]

Table 20: **FG676 — XCV400E, XCV600E**

Bank	Pin Description	Pin #
7	IO	D2
7	IO	D3
7	IO	E1
7	IO	G1
7	IO	H2
7	IO	J1[1]
7	IO	L1[1]
7	IO	M1[1]
7	IO	N1[1]
7	IO_L160N_YY	N5
7	IO_L160P_YY	N8
7	IO_L161N_YY	N6
7	IO_L161P_YY	N3
7	IO_L162N_Y	N4
7	IO_VREF_L162P_Y	M2
7	IO_L163N_Y	N7
7	IO_L163P_Y	M7
7	IO_L164N_YY	M6
7	IO_L164P_YY	M3
7	IO_L165N_YY	M4
7	IO_VREF_L165P_YY	M5
7	IO_L166N_Y	L3
7	IO_L166P_Y	L7
7	IO_L167N_Y	L6
7	IO_L167P_Y	K2
7	IO_L168N_Y	L4
7	IO_L168P_Y	K1
7	IO_L169N_Y	K3
7	IO_L169P_Y	L5
7	IO_L170N_YY	K5
7	IO_L170P_YY	J3
7	IO_L171N_YY	K4
7	IO_L171P_YY	J4
7	IO_L172N_YY	H3
7	IO_VREF_L172P_YY	K6
7	IO_L173N_YY	K7
7	IO_L173P_YY	G3

Table 20: **FG676 — XCV400E, XCV600E**

Bank	Pin Description	Pin #
7	IO_L174N_Y	J5
7	IO_VREF_L174P_Y	H1[2]
7	IO_L175N_Y	G2
7	IO_L175P_Y	J6
7	IO_L176N_YY	J7
7	IO_L176P_YY	F1
7	IO_L177N_YY	H4
7	IO_VREF_L177P_YY	G4
7	IO_L178N_Y	F3
7	IO_L178P_Y	H5
7	IO_L179N_Y	E2
7	IO_L179P_Y	H6
7	IO_L180N_Y	G5
7	IO_VREF_L180P_Y	F4
7	IO_L181N_Y	H7
7	IO_L181P_Y	G6
7	IO_L182N_YY	E3
7	IO_L182P_YY	E4
2	CCLK	D24
3	DONE	AB21
NA	DXN	AB7
NA	DXP	Y8
NA	M0	AD4
NA	M1	W7
NA	M2	AB6
NA	PROGRAM	AA22
NA	TCK	E6
NA	TDI	D22
2	TDO	C23
NA	TMS	F5
NA	NC	T25
NA	NC	T2
NA	NC	P2
NA	NC	N25
NA	NC	L25

Table 20: **FG676 — XCV400E, XCV600E**

Bank	Pin Description	Pin #
NA	NC	L2
NA	NC	F6
NA	NC	F25
NA	NC	F21
NA	NC	F2
NA	NC	C26
NA	NC	C25
NA	NC	C2
NA	NC	C1
NA	NC	B6
NA	NC	B26
NA	NC	B24
NA	NC	B21
NA	NC	B16
NA	NC	B11
NA	NC	B1
NA	NC	AF25
NA	NC	AF24
NA	NC	AF2
NA	NC	AE6
NA	NC	AE3
NA	NC	AE26
NA	NC	AE24
NA	NC	AE21
NA	NC	AE16
NA	NC	AE14
NA	NC	AE11
NA	NC	AE1
NA	NC	AD25
NA	NC	AD2
NA	NC	AD1
NA	NC	AA6
NA	NC	AA25
NA	NC	AA21
NA	NC	AA2
NA	NC	A3
NA	NC	A25

Table 20: **FG676 — XCV400E, XCV600E**

Bank	Pin Description	Pin #
NA	NC	A2
NA	NC	A15
NA	VCCINT	G7
NA	VCCINT	G20
NA	VCCINT	H8
NA	VCCINT	H19
NA	VCCINT	J9
NA	VCCINT	J10
NA	VCCINT	J11
NA	VCCINT	J16
NA	VCCINT	J17
NA	VCCINT	J18
NA	VCCINT	K9
NA	VCCINT	K18
NA	VCCINT	L9
NA	VCCINT	L18
NA	VCCINT	T9
NA	VCCINT	T18
NA	VCCINT	U9
NA	VCCINT	U18
NA	VCCINT	V9
NA	VCCINT	V10
NA	VCCINT	V11
NA	VCCINT	V16
NA	VCCINT	V17
NA	VCCINT	V18
NA	VCCINT	Y7
NA	VCCINT	Y20
NA	VCCINT	W8
NA	VCCINT	W19
0	VCCO	J13
0	VCCO	J12
0	VCCO	H9
0	VCCO	H12
0	VCCO	H11

Table 20: **FG676 — XCV400E, XCV600E**

Bank	Pin Description	Pin #
0	VCCO	H10
1	VCCO	J15
1	VCCO	J14
1	VCCO	H18
1	VCCO	H17
1	VCCO	H16
1	VCCO	H15
2	VCCO	N18
2	VCCO	M19
2	VCCO	M18
2	VCCO	L19
2	VCCO	K19
2	VCCO	J19
3	VCCO	V19
3	VCCO	U19
3	VCCO	T19
3	VCCO	R19
3	VCCO	R18
3	VCCO	P18
4	VCCO	W18
4	VCCO	W17
4	VCCO	W16
4	VCCO	W15
4	VCCO	V15
4	VCCO	V14
5	VCCO	W9
5	VCCO	W12
5	VCCO	W11
5	VCCO	W10
5	VCCO	V13
5	VCCO	V12
6	VCCO	V8
6	VCCO	U8
6	VCCO	T8
6	VCCO	R9
6	VCCO	R8
6	VCCO	P9

Table 20: **FG676 — XCV400E, XCV600E**

Bank	Pin Description	Pin #
7	VCCO	N9
7	VCCO	M9
7	VCCO	M8
7	VCCO	L8
7	VCCO	K8
7	VCCO	J8
NA	GND	V25
NA	GND	V2
NA	GND	U17
NA	GND	U16
NA	GND	U15
NA	GND	U14
NA	GND	U13
NA	GND	U12
NA	GND	U11
NA	GND	U10
NA	GND	T17
NA	GND	T16
NA	GND	T15
NA	GND	T14
NA	GND	T13
NA	GND	T12
NA	GND	T11
NA	GND	T10
NA	GND	R17
NA	GND	R16
NA	GND	R15
NA	GND	R14
NA	GND	R13
NA	GND	R12
NA	GND	R11
NA	GND	R10
NA	GND	P25
NA	GND	P17
NA	GND	P16
NA	GND	P15

Table 20: **FG676 — XCV400E, XCV600E**

Bank	Pin Description	Pin #
NA	GND	P14
NA	GND	P13
NA	GND	P12
NA	GND	P11
NA	GND	P10
NA	GND	N2
NA	GND	N17
NA	GND	N16
NA	GND	N15
NA	GND	N14
NA	GND	N13
NA	GND	N12
NA	GND	N11
NA	GND	N10
NA	GND	M17
NA	GND	M16
NA	GND	M15
NA	GND	M14
NA	GND	M13
NA	GND	M12
NA	GND	M11
NA	GND	M10
NA	GND	L17
NA	GND	L16
NA	GND	L15
NA	GND	L14
NA	GND	L13
NA	GND	L12
NA	GND	L11
NA	GND	L10
NA	GND	K17
NA	GND	K16
NA	GND	K15
NA	GND	K14
NA	GND	K13
NA	GND	K12
NA	GND	K11

Table 20: **FG676 — XCV400E, XCV600E**

Bank	Pin Description	Pin #
NA	GND	K10
NA	GND	J25
NA	GND	J2
NA	GND	E5
NA	GND	E22
NA	GND	D4
NA	GND	D23
NA	GND	C3
NA	GND	C24
NA	GND	B9
NA	GND	B25
NA	GND	B2
NA	GND	B18
NA	GND	B14
NA	GND	AF26
NA	GND	AF1
NA	GND	AE9
NA	GND	AE25
NA	GND	AE2
NA	GND	AE18
NA	GND	AE13
NA	GND	AD3
NA	GND	AD24
NA	GND	AC4
NA	GND	AC23
NA	GND	AB5
NA	GND	AB22
NA	GND	A26
NA	GND	A1

Notes:
1. NC in the XCV400E.
2. V_{REF} or I/O option only in the XCV600E; otherwise, I/O option only.

FG676 Differential Pin Pairs

Virtex-E devices have differential pin pairs that can also provide other functions when not used as a differential pair. A √ in the AO column indicates that the pin pair can be used as an asynchronous output for all devices provided in this package. Pairs with a note number in the AO column are device dependent. They can have asynchronous outputs if the pin pair are in the same CLB row and column in the device. Numbers in this column refer to footnotes that indicate which devices have pin pairs than can be asynchronous outputs. The Other Functions column indicates alternative function(s) not available when the pair is used as a differential pair or differential clock.

Table 21: **FG676 Differential Pin Pair Summary XCV400E, XCV600E**

Pair	Bank	P Pin	N Pin	AO	Other Functions
Global Differential Clock					
3	0	E13	B13	NA	IO_DLL_L21N
2	1	C13	F14	NA	IO_DLL_L21P
1	5	AB13	AF13	NA	IO_DLL_L115N
0	4	AA14	AC14	NA	IO_DLL_L115P
IOLVDS Total Pairs: 183, Asynchronous Output Pairs: 97					
0	0	F7	C4	1	-
1	0	C5	G8	√	-
2	0	E7	D6	√	VREF
3	0	F8	A4	NA	-
4	0	D7	B5	NA	-
5	0	G9	E8	√	VREF
6	0	F9	A5	√	-
7	0	C7	D8	1	-
8	0	E9	B7	1	VREF
9	0	D9	A7	NA	-
10	0	G10	B8	NA	VREF
11	0	F10	C9	√	-
12	0	E10	A8	1	-
13	0	D10	G11	√	-
14	0	F11	B10	√	-
15	0	E11	C10	NA	-
16	0	D11	G12	√	-
17	0	F12	C11	√	VREF

Table 21: **FG676 Differential Pin Pair Summary XCV400E, XCV600E**

Pair	Bank	P Pin	N Pin	AO	Other Functions
18	0	E12	A11	√	-
19	0	C12	D12	1	-
20	0	H13	A12	1	VREF
21	1	F14	B13	NA	IO_LVDS_DLL
22	1	F13	E14	NA	-
23	1	A14	D14	1	VREF
24	1	H14	C14	1	-
25	1	C15	G14	√	-
26	1	D15	E15	√	VREF
27	1	F15	C16	√	-
28	1	D16	G15	-	-
29	1	A17	E16	√	-
30	1	E17	C17	√	-
31	1	D17	F16	1	-
32	1	C18	F17	√	-
33	1	G16	A18	√	VREF
34	1	G17	C19	√	-
35	1	B19	D18	1	VREF
36	1	E18	D19	1	-
37	1	B20	F18	√	-
38	1	C20	G19	√	VREF
39	1	E19	G18	√	-
40	1	D20	A21	√	-
41	1	C21	F19	√	VREF
42	1	E20	B22	√	-
43	1	D21	A23	2	-
44	1	E21	C22	√	CS
45	2	E23	F22	√	DIN, D0
46	2	E24	F20	√	-
47	2	G21	G22	2	-
48	2	F24	H20	1	VREF
49	2	E25	H21	1	-
50	2	F23	G23	√	-
51	2	H23	J20	√	VREF

Table 21: **FG676 Differential Pin Pair Summary XCV400E, XCV600E**

Pair	Bank	P Pin	N Pin	AO	Other Functions
52	2	G24	H22	√	-
53	2	J21	G25	2	-
54	2	G26	J22	1	VREF
55	2	H24	J23	√	-
56	2	J24	K20	√	VREF
57	2	K22	K21	√	D2
58	2	H25	K23	√	-
59	2	L20	J26	2	-
60	2	K25	L22	1	-
61	2	L21	L23	1	-
62	2	M20	L24	1	-
63	2	M23	M22	√	D3
64	2	L26	M21	√	-
65	2	N19	M24	2	-
66	2	M26	N20	1	VREF
67	2	N24	N21	√	-
68	2	N23	N22	√	-
69	3	P21	P23	√	-
70	3	P22	R25	1	VREF
71	3	P19	P20	2	-
72	3	R21	R22	√	-
73	3	R24	R23	√	VREF
74	3	T24	R20	1	-
75	3	T22	U24	1	-
76	3	T23	U25	1	-
77	3	T21	U20	2	-
78	3	U22	V26	√	-
79	3	T20	U23	√	D5
80	3	V24	U21	√	VREF
81	3	V23	W24	√	-
82	3	V22	W26	1	VREF
83	3	Y25	V21	2	-
84	3	V20	AA26	√	-
85	3	Y24	W23	√	VREF

Table 21: **FG676 Differential Pin Pair Summary XCV400E, XCV600E**

Pair	Bank	P Pin	N Pin	AO	Other Functions
86	3	AA24	Y23	1	-
87	3	AB26	W21	2	-
88	3	Y22	W22	1	VREF
89	3	AA23	AB24	2	-
90	3	W20	AC24	√	-
91	3	AB23	Y21	√	INIT
92	4	AC22	AD26	√	-
93	4	AD23	AA20	1	-
94	4	Y19	AC21	√	-
95	4	AD22	AB20	√	VREF
96	4	AE22	Y18	NA	-
97	4	AF22	AA19	NA	-
98	4	AD21	AB19	√	VREF
99	4	AC20	AA18	√	-
100	4	AC19	AD20	1	-
101	4	AF20	AB18	1	VREF
102	4	AD19	Y17	NA	-
103	4	AE19	AD18	NA	VREF
104	4	AF19	AA17	√	-
105	4	AC17	AB17	1	-
106	4	Y16	AE17	√	-
107	4	AF17	AA16	√	-
108	4	AD17	AB16	NA	-
109	4	AC16	AD16	√	-
110	4	AC15	Y15	√	VREF
111	4	AD15	AA15	√	-
112	4	W14	AB15	1	-
113	4	AF15	Y14	1	VREF
114	4	AD14	AB14	NA	-
115	5	AC14	AF13	NA	IO_LVDS_DLL
116	5	AA13	AF12	1	VREF
117	5	AC13	W13	1	-
118	5	AA12	AD12	√	-
119	5	AC12	AB12	√	VREF

Table 21: **FG676 Differential Pin Pair Summary XCV400E, XCV600E**

Pair	Bank	P Pin	N Pin	AO	Other Functions
120	5	AD11	Y12	√	-
121	5	AB11	AD10	NA	-
122	5	AC11	AE10	√	-
123	5	AC10	AA11	√	-
124	5	Y11	AD9	1	-
125	5	AB10	AF9	√	-
126	5	AD8	AA10	√	VREF
127	5	AE8	Y10	√	-
128	5	AC9	AF8	1	VREF
129	5	AF7	AB9	1	-
130	5	AA9	AF6	√	-
131	5	AC8	AC7	√	VREF
132	5	AD6	Y9	√	-
133	5	AE5	AA8	√	-
134	5	AC6	AB8	√	VREF
135	5	AD5	AA7	√	-
136	5	AF4	AC5	2	-
137	6	AC3	AA5	√	-
138	6	AB4	AC2	√	-
139	6	AA4	W6	2	-
140	6	Y5	AB3	1	VREF
141	6	V7	AB2	1	-
142	6	Y4	AB1	√	-
143	6	W5	V5	√	VREF
144	6	V6	AA1	√	-
145	6	Y3	W4	2	-
146	6	U7	Y1	1	VREF
147	6	V4	W1	√	-
148	6	U6	W2	√	VREF
149	6	T5	V3	√	-
150	6	U4	U5	√	-
151	6	U3	T7	2	-
152	6	T6	U2	1	-
153	6	T4	U1	1	-

Table 21: **FG676 Differential Pin Pair Summary XCV400E, XCV600E**

Pair	Bank	P Pin	N Pin	AO	Other Functions
154	6	T3	R7	1	-
155	6	R6	R4	√	VREF
156	6	R5	R3	√	-
157	6	P7	P8	2	-
158	6	P6	R1	1	VREF
159	6	P4	P5	√	-
160	7	N8	N5	√	-
161	7	N3	N6	√	-
162	7	M2	N4	1	VREF
163	7	M7	N7	2	-
164	7	M3	M6	√	-
165	7	M5	M4	√	VREF
166	7	L7	L3	1	-
167	7	K2	L6	1	-
168	7	K1	L4	1	-
169	7	L5	K3	2	-
170	7	J3	K5	√	-
171	7	J4	K4	√	-
172	7	K6	H3	√	VREF
173	7	G3	K7	√	-
174	7	H1	J5	1	VREF
175	7	J6	G2	2	-
176	7	F1	J7	√	-
177	7	G4	H4	√	VREF
178	7	H5	F3	1	-
179	7	H6	E2	2	-
180	7	F4	G5	1	VREF
181	7	G6	H7	2	-
182	7	E4	E3	√	-

Notes:
1. AO in the XCV600E.
2. AO in the XCV400E.

FG680 Fine-Pitch Ball Grid Array Package

XCV600E, XCV1000E, XCV1600E, and XCV2000E devices in the FG680 fine-pitch Ball Grid Array package have footprint compatibility. Pins labeled I0_VREF can be used as either in all parts unless device-dependent as indicated in the footnotes. If the pin is not used as V_{REF}, it can be used as general I/O. Immediately following Table 22, see Table 23 for Differential Pair information.

Table 22: **FG680 - XCV600E, XCV1000E, XCV1600E, XCV2000E**

Bank	Pin Description	Pin #
0	GCK3	A20
0	IO	D35
0	IO	B36
0	IO_L0N_Y	C35
0	IO_L0P_Y	A36
0	IO_VREF_L1N_Y	D34[1]
0	IO_L1P_Y	B35
0	IO_L2N_YY	C34
0	IO_L2P_YY	A35
0	IO_VREF_L3N_YY	D33
0	IO_L3P_YY	B34
0	IO_L4N	C33
0	IO_L4P	A34
0	IO_L5N_Y	D32
0	IO_L5P_Y	B33
0	IO_L6N_YY	C32
0	IO_L6P_YY	D31
0	IO_VREF_L7N_YY	A33
0	IO_L7P_YY	C31
0	IO_L8N_Y	B32
0	IO_L8P_Y	B31
0	IO_VREF_L9N_Y	A32[3]
0	IO_L9P_Y	D30
0	IO_L10N_YY	A31
0	IO_L10P_YY	C30
0	IO_VREF_L11N_YY	B30
0	IO_L11P_YY	D29
0	IO_L12N_Y	A30
0	IO_L12P_Y	C29

Table 22: **FG680 - XCV600E, XCV1000E, XCV1600E, XCV2000E**

Bank	Pin Description	Pin #
0	IO_L13N_Y	A29
0	IO_L13P_Y	B29
0	IO_VREF_L14N_YY	B28
0	IO_L14P_YY	A28
0	IO_L15N_YY	C28
0	IO_L15P_YY	B27
0	IO_L16N_Y	D27
0	IO_L16P_Y	A27
0	IO_L17N_Y	C27
0	IO_L17P_Y	B26
0	IO_L18N_YY	D26
0	IO_L18P_YY	C26
0	IO_VREF_L19N_YY	A26[1]
0	IO_L19P_YY	D25
0	IO_L20N_Y	B25
0	IO_L20P_Y	C25
0	IO_L21N_Y	A25
0	IO_L21P_Y	D24
0	IO_L22N_YY	A24
0	IO_L22P_YY	B23
0	IO_VREF_L23N_YY	C24
0	IO_L23P_YY	A23
0	IO_L24N_Y	B24
0	IO_L24P_Y	B22
0	IO_L25N_Y	E23
0	IO_L25P_Y	A22
0	IO_L26N_YY	D23
0	IO_L26P_YY	B21
0	IO_VREF_L27N_YY	C23
0	IO_L27P_YY	A21
0	IO_L28N_Y	E22
0	IO_L28P_Y	B20
0	IO_LVDS_DLL_L29N	C22
0	IO_VREF	D22[2]
1	GCK2	D21

Table 22: **FG680 - XCV600E, XCV1000E, XCV1600E, XCV2000E**

Bank	Pin Description	Pin #
1	IO	C5
1	IO_LVDS_DLL_L29P	A19
1	IO_L30N_Y	C21
1	IO_VREF_L30P_Y	B19[2]
1	IO_L31N_Y	C19
1	IO_L31P_Y	A18
1	IO_L32N_YY	D19
1	IO_VREF_L32P_YY	B18
1	IO_L33N_YY	C18
1	IO_L33P_YY	A17
1	IO_L34N_Y	D18
1	IO_L34P_Y	B17
1	IO_L35N_Y	E18
1	IO_L35P_Y	A16
1	IO_L36N_YY	C17
1	IO_VREF_L36P_YY	D17
1	IO_L37N_YY	B16
1	IO_L37P_YY	E17
1	IO_L38N_Y	A15
1	IO_L38P_Y	C16
1	IO_L39N_Y	B15
1	IO_L39P_Y	D16
1	IO_L40N_YY	A14
1	IO_VREF_L40P_YY	B14[1]
1	IO_L41N_YY	C15
1	IO_L41P_YY	A13
1	IO_L42N_Y	D15
1	IO_L42P_Y	B13
1	IO_L43N_Y	C14
1	IO_L43P_Y	A12
1	IO_L44N_YY	D14
1	IO_L44P_YY	C13
1	IO_L45N_YY	B12
1	IO_VREF_L45P_YY	D13
1	IO_L46N_Y	A11
1	IO_L46P_Y	C12

Table 22: **FG680 - XCV600E, XCV1000E, XCV1600E, XCV2000E**

Bank	Pin Description	Pin #
1	IO_L47N_Y	B11
1	IO_L47P_Y	C11
1	IO_L48N_YY	A10
1	IO_VREF_L48P_YY	D11
1	IO_L49N_YY	B10
1	IO_L49P_YY	C10
1	IO_L50N_Y	A9
1	IO_VREF_L50P_Y	D10[3]
1	IO_L51N_Y	B9
1	IO_L51P_Y	C9
1	IO_L52N_YY	A8
1	IO_VREF_L52P_YY	B8
1	IO_L53N_YY	D9
1	IO_L53P_YY	A7
1	IO_L54N_Y	C8
1	IO_L54P_Y	B7
1	IO_L55N_Y	D8
1	IO_L55P_Y	A6
1	IO_L56N_YY	C7
1	IO_VREF_L56P_YY	B6
1	IO_L57N_YY	D7
1	IO_L57P_YY	A5
1	IO_L58N_Y	C6
1	IO_VREF_L58P_Y	B5[1]
1	IO_L59N_Y	D6
1	IO_L59P_Y	A4
1	IO_WRITE_L60N_YY	B4
1	IO_CS_L60P_YY	D5
2	IO	D1
2	IO	F4
2	IO_DOUT_BUSY_L61P_YY	E3
2	IO_DIN_D0_L61N_YY	C2
2	IO_L62P_Y	D3
2	IO_L62N_Y	F3
2	IO_VREF_L63P	D2[1]

Table 22: **FG680 - XCV600E, XCV1000E, XCV1600E, XCV2000E**

Bank	Pin Description	Pin #
2	IO_L63N	G4
2	IO_L64P	G3
2	IO_L64N	E2
2	IO_VREF_L65P_Y	H4
2	IO_L65N_Y	E1
2	IO_L66P_YY	H3
2	IO_L66N_YY	F2
2	IO_L67P	J4
2	IO_L67N	F1
2	IO_L68P_Y	J3
2	IO_L68N_Y	G2
2	IO_VREF_L69P_YY	G1
2	IO_L69N_YY	K4
2	IO_L70P_YY	H2
2	IO_L70N_YY	K3
2	IO_VREF_L71P	H1[3]
2	IO_L71N	L4
2	IO_L72P	J2
2	IO_L72N	L3
2	IO_VREF_L73P_YY	J1
2	IO_L73N_YY	M3
2	IO_L74P_YY	K2
2	IO_L74N_YY	N4
2	IO_L75P	K1
2	IO_L75N	N3
2	IO_VREF_L76P_YY	L2
2	IO_D1_L76N_YY	P4
2	IO_D2_L77P_YY	P3
2	IO_L77N_YY	L1
2	IO_L78P_Y	R4
2	IO_L78N_Y	M2
2	IO_L79P	R3
2	IO_L79N	M1
2	IO_L80P	T4
2	IO_L80N	N2
2	IO_VREF_L81P_Y	N1[1]

Table 22: **FG680 - XCV600E, XCV1000E, XCV1600E, XCV2000E**

Bank	Pin Description	Pin #
2	IO_L81N_Y	T3
2	IO_L82P_YY	P2
2	IO_L82N_YY	U5
2	IO_L83P	P1
2	IO_L83N	U4
2	IO_L84P_Y	R2
2	IO_L84N_Y	U3
2	IO_VREF_L85P_YY	V5
2	IO_D3_L85N_YY	R1
2	IO_L86P_YY	V4
2	IO_L86N_YY	T2
2	IO_L87P	V3
2	IO_L87N	T1
2	IO_L88P	W4
2	IO_L88N	U2
2	IO_VREF_L89P_YY	W3
2	IO_L89N_YY	U1
2	IO_L90P_YY	AA3
2	IO_L90N_YY	V2
2	IO_VREF_L91P	AA4[2]
2	IO_L91N	V1
2	IO_L92P_YY	AB2
2	IO_L92N_YY	W2
3	IO	AP3
3	IO	AT3
3	IO	AB3
3	IO_L93P	AB4
3	IO_VREF_L93N	W1[2]
3	IO_L94P_YY	AB5
3	IO_L94N_YY	Y2
3	IO_L95P_YY	AC2
3	IO_VREF_L95N_YY	Y1
3	IO_L96P	AC3
3	IO_L96N	AA1
3	IO_L97P	AC4

Table 22: **FG680 - XCV600E, XCV1000E, XCV1600E, XCV2000E**

Bank	Pin Description	Pin #
3	IO_L97N	AA2
3	IO_L98P_YY	AC5
3	IO_L98N_YY	AB1
3	IO_D4_L99P_YY	AD3
3	IO_VREF_L99N_YY	AC1
3	IO_L100P_Y	AD1
3	IO_L100N_Y	AD4
3	IO_L101P	AD2
3	IO_L101N	AE3
3	IO_L102P_YY	AE1
3	IO_L102N_YY	AE4
3	IO_L103P_Y	AE2
3	IO_VREF_L103N_Y	AF3[1]
3	IO_L104P	AF4
3	IO_L104N	AF1
3	IO_L105P	AG3
3	IO_L105N	AF2
3	IO_L106P_Y	AG4
3	IO_L106N_Y	AG1
3	IO_L107P_YY	AH3
3	IO_D5_L107N_YY	AG2
3	IO_D6_L108P_YY	AH1
3	IO_VREF_L108N_YY	AJ2
3	IO_L109P	AH2
3	IO_L109N	AJ3
3	IO_L110P_YY	AJ1
3	IO_L110N_YY	AJ4
3	IO_L111P_YY	AK1
3	IO_VREF_L111N_YY	AK3
3	IO_L112P	AK2
3	IO_L112N	AK4
3	IO_L113P	AL1
3	IO_VREF_L113N	AL2[3]
3	IO_L114P_YY	AM1
3	IO_L114N_YY	AL3
3	IO_L115P_YY	AM2

Table 22: **FG680 - XCV600E, XCV1000E, XCV1600E, XCV2000E**

Bank	Pin Description	Pin #
3	IO_VREF_L115N_YY	AL4
3	IO_L116P_Y	AM3
3	IO_L116N_Y	AN1
3	IO_L117P	AM4
3	IO_L117N	AP1
3	IO_L118P_YY	AN2
3	IO_L118N_YY	AP2
3	IO_L119P_Y	AN3
3	IO_VREF_L119N_Y	AR1
3	IO_L120P	AN4
3	IO_L120N	AT1
3	IO_L121P	AR2
3	IO_VREF_L121N	AP4[1]
3	IO_L122P_Y	AT2
3	IO_L122N_Y	AR3
3	IO_D7_L123P_YY	AR4
3	IO_INIT_L123N_YY	AU2
4	GCK0	AW19
4	IO	AV3
4	IO_L124P_YY	AU4
4	IO_L124N_YY	AV5
4	IO_L125P_Y	AT6
4	IO_L125N_Y	AV4
4	IO_VREF_L126P_Y	AU6[1]
4	IO_L126N_Y	AW4
4	IO_L127P_YY	AT7
4	IO_L127N_YY	AW5
4	IO_VREF_L128P_YY	AU7
4	IO_L128N_YY	AV6
4	IO_L129P_Y	AT8
4	IO_L129N_Y	AW6
4	IO_L130P_Y	AU8
4	IO_L130N_Y	AV7
4	IO_L131P_YY	AT9
4	IO_L131N_YY	AW7

Table 22: **FG680 - XCV600E, XCV1000E, XCV1600E, XCV2000E**

Bank	Pin Description	Pin #
4	IO_VREF_L132P_YY	AV8
4	IO_L132N_YY	AU9
4	IO_L133P_Y	AW8
4	IO_L133N_Y	AT10
4	IO_VREF_L134P_Y	AV9[3]
4	IO_L134N_Y	AU10
4	IO_L135P_YY	AW9
4	IO_L135N_YY	AT11
4	IO_VREF_L136P_YY	AV10
4	IO_L136N_YY	AU11
4	IO_L137P_Y	AW10
4	IO_L137N_Y	AU12
4	IO_L138P_Y	AV11
4	IO_L138N_Y	AT13
4	IO_VREF_L139P_YY	AW11
4	IO_L139N_YY	AU13
4	IO_L140P_YY	AT14
4	IO_L140N_YY	AV12
4	IO_L141P_Y	AU14
4	IO_L141N_Y	AW12
4	IO_L142P_Y	AT15
4	IO_L142N_Y	AV13
4	IO_L143P_YY	AU15
4	IO_L143N_YY	AW13
4	IO_VREF_L144P_YY	AV14[1]
4	IO_L144N_YY	AT16
4	IO_L145P_Y	AW14
4	IO_L145N_Y	AU16
4	IO_L146P_Y	AV15
4	IO_L146N_Y	AR17
4	IO_L147P_YY	AW15
4	IO_L147N_YY	AT17
4	IO_VREF_L148P_YY	AU17
4	IO_L148N_YY	AV16
4	IO_L149P_Y	AR18
4	IO_L149N_Y	AW16

Table 22: **FG680 - XCV600E, XCV1000E, XCV1600E, XCV2000E**

Bank	Pin Description	Pin #
4	IO_L150P_Y	AT18
4	IO_L150N_Y	AV17
4	IO_L151P_YY	AU18
4	IO_L151N_YY	AW17
4	IO_VREF_L152P_YY	AT19
4	IO_L152N_YY	AV18
4	IO_L153P_Y	AU19
4	IO_L153N_Y	AW18
4	IO_VREF_L154P	AU21[2]
4	IO_L154N	AV19
4	IO_LVDS_DLL_L155P	AT21
5	GCK1	AU22
5	IO	AT34
5	IO	AW20
5	IO_LVDS_DLL_L155N	AT22
5	IO_VREF_L156P_Y	AV20[2]
5	IO_L156N_Y	AR22
5	IO_L157P_YY	AV23
5	IO_VREF_L157N_YY	AW21
5	IO_L158P_YY	AU23
5	IO_L158N_YY	AV21
5	IO_L159P_Y	AT23
5	IO_L159N_Y	AW22
5	IO_L160P_Y	AR23
5	IO_L160N_Y	AV22
5	IO_L161P_YY	AV24
5	IO_VREF_L161N_YY	AW23
5	IO_L162P_YY	AW24
5	IO_L162N_YY	AU24
5	IO_L163P_Y	AW25
5	IO_L163N_Y	AT24
5	IO_L164P_Y	AV25
5	IO_L164N_Y	AU25
5	IO_L165P_YY	AW26
5	IO_VREF_L165N_YY	AT25[1]

Table 22: **FG680 - XCV600E, XCV1000E, XCV1600E, XCV2000E**

Bank	Pin Description	Pin #
5	IO_L166P_YY	AV26
5	IO_L166N_YY	AW27
5	IO_L167P_Y	AU26
5	IO_L167N_Y	AV27
5	IO_L168P_Y	AT26
5	IO_L168N_Y	AW28
5	IO_L169P_YY	AU27
5	IO_L169N_YY	AV28
5	IO_L170P_YY	AW29
5	IO_VREF_L170N_YY	AT27
5	IO_L171P_Y	AW30
5	IO_L171N_Y	AU28
5	IO_L172P_Y	AV30
5	IO_L172N_Y	AV29
5	IO_L173P_YY	AW31
5	IO_VREF_L173N_YY	AU29
5	IO_L174P_YY	AV31
5	IO_L174N_YY	AT29
5	IO_L175P_Y	AW32
5	IO_VREF_L175N_Y	AU30[3]
5	IO_L176P_Y	AW33
5	IO_L176N_Y	AT30
5	IO_L177P_YY	AV33
5	IO_VREF_L177N_YY	AU31
5	IO_L178P_YY	AT31
5	IO_L178N_YY	AW34
5	IO_L179P_Y	AV32
5	IO_L179N_Y	AV34
5	IO_L180P_Y	AU32
5	IO_L180N_Y	AW35
5	IO_L181P_YY	AT32
5	IO_VREF_L181N_YY	AV35
5	IO_L182P_YY	AU33
5	IO_L182N_YY	AW36
5	IO_L183P_Y	AT33
5	IO_VREF_L183N_Y	AV36[1]

Table 22: **FG680 - XCV600E, XCV1000E, XCV1600E, XCV2000E**

Bank	Pin Description	Pin #
5	IO_L184P_Y	AU34
5	IO_L184N_Y	AU36
6	IO	W39
6	IO	AR37
6	IO	AR39
6	IO_L185N_YY	AR36
6	IO_L185P_YY	AT38
6	IO_L186N_Y	AR38
6	IO_L186P_Y	AP36
6	IO_VREF_L187N	AT39[1]
6	IO_L187P	AP37
6	IO_L188N	AP38
6	IO_L188P	AP39
6	IO_VREF_L189N_Y	AN36
6	IO_L189P_Y	AN38
6	IO_L190N_YY	AN37
6	IO_L190P_YY	AN39
6	IO_L191N	AM36
6	IO_L191P	AM38
6	IO_L192N_Y	AM37
6	IO_L192P_Y	AL36
6	IO_VREF_L193N_YY	AM39
6	IO_L193P_YY	AL37
6	IO_L194N_YY	AL38
6	IO_L194P_YY	AK36
6	IO_VREF_L195N	AL39[3]
6	IO_L195P	AK37
6	IO_L196N	AK38
6	IO_L196P	AJ36
6	IO_VREF_L197N_YY	AK39
6	IO_L197P_YY	AJ37
6	IO_L198N_YY	AJ38
6	IO_L198P_YY	AH37
6	IO_L199N	AJ39
6	IO_L199P	AH38

Table 22: **FG680 - XCV600E, XCV1000E, XCV1600E, XCV2000E**

Bank	Pin Description	Pin #
6	IO_VREF_L200N_YY	AH39
6	IO_L200P_YY	AG38
6	IO_L201N_YY	AG36
6	IO_L201P_YY	AG39
6	IO_L202N_Y	AG37
6	IO_L202P_Y	AF39
6	IO_L203N	AF36
6	IO_L203P	AE38
6	IO_L204N	AF37
6	IO_L204P	AF38
6	IO_VREF_L205N_Y	AE39[1]
6	IO_L205P_Y	AE36
6	IO_L206N_YY	AD38
6	IO_L206P_YY	AE37
6	IO_L207N	AD39
6	IO_L207P	AD36
6	IO_L208N_Y	AC38
6	IO_L208P_Y	AC39
6	IO_VREF_L209N_YY	AD37
6	IO_L209P_YY	AB38
6	IO_L210N_YY	AC35
6	IO_L210P_YY	AB39
6	IO_L211N	AC36
6	IO_L211P	AA38
6	IO_L212N	AC37
6	IO_L212P	AA39
6	IO_VREF_L213N_YY	AB35
6	IO_L213P_YY	Y38
6	IO_L214N_YY	AB36
6	IO_L214P_YY	Y39
6	IO_VREF_L215N	AB37[2]
6	IO_L215P	AA36
7	IO	C38
7	IO	B37
7	IO	F37

Table 22: **FG680 - XCV600E, XCV1000E, XCV1600E, XCV2000E**

Bank	Pin Description	Pin #
7	IO_L216N_YY	AA37
7	IO_L216P_YY	W38
7	IO_L217N	W37
7	IO_VREF_L217P	V39[2]
7	IO_L218N_YY	W36
7	IO_L218P_YY	U39
7	IO_L219N_YY	V38
7	IO_VREF_L219P_YY	U38
7	IO_L220N	V37
7	IO_L220P	T39
7	IO_L221N	V36
7	IO_L221P	T38
7	IO_L222N_YY	V35
7	IO_L222P_YY	R39
7	IO_L223N_YY	U37
7	IO_VREF_L223P_YY	U36
7	IO_L224N_Y	R38
7	IO_L224P_Y	U35
7	IO_L225N	P39
7	IO_L225P	T37
7	IO_L226N_YY	P38
7	IO_L226P_YY	T36
7	IO_L227N_Y	N39
7	IO_VREF_L227P_Y	N38[1]
7	IO_L228N	R37
7	IO_L228P	M39
7	IO_L229N	R36
7	IO_L229P	M38
7	IO_L230N_Y	P37
7	IO_L230P_Y	L39
7	IO_L231N_YY	P36
7	IO_L231P_YY	N37
7	IO_L232N_YY	L38
7	IO_VREF_L232P_YY	N36
7	IO_L233N	K39
7	IO_L233P	M37

Table 22: **FG680 - XCV600E, XCV1000E, XCV1600E, XCV2000E**

Bank	Pin Description	Pin #
7	IO_L234N_YY	K38
7	IO_L234P_YY	L37
7	IO_L235N_YY	J39
7	IO_VREF_L235P_YY	L36
7	IO_L236N	J38
7	IO_L236P	K37
7	IO_L237N	H39
7	IO_VREF_L237P	K36[3]
7	IO_L238N_YY	H38
7	IO_L238P_YY	J37
7	IO_L239N_YY	G39
7	IO_VREF_L239P_YY	G38
7	IO_L240N_Y	J36
7	IO_L240P_Y	F39
7	IO_L241N	H37
7	IO_L241P	F38
7	IO_L242N_YY	H36
7	IO_L242P_YY	E39
7	IO_L243N_Y	G37
7	IO_VREF_L243P_Y	E38
7	IO_L244N	G36
7	IO_L244P	D39
7	IO_L245N	D38
7	IO_VREF_L245P	F36[1]
7	IO_L246N_Y	D37
7	IO_L246P_Y	E37
2	CCLK	E4
3	DONE	AU5
NA	DXN	AV37
NA	DXP	AU35
NA	M0	AT37
NA	M1	AU38
NA	M2	AT35
NA	PROGRAM	AT5
NA	TCK	C36

Table 22: **FG680 - XCV600E, XCV1000E, XCV1600E, XCV2000E**

Bank	Pin Description	Pin #
NA	TDI	B3
2	TDO	C4
NA	TMS	E36
NA	VCCINT	E8
NA	VCCINT	E9
NA	VCCINT	E15
NA	VCCINT	E16
NA	VCCINT	E24
NA	VCCINT	E25
NA	VCCINT	E31
NA	VCCINT	E32
NA	VCCINT	H5
NA	VCCINT	H35
NA	VCCINT	J5
NA	VCCINT	J35
NA	VCCINT	R5
NA	VCCINT	R35
NA	VCCINT	T5
NA	VCCINT	T35
NA	VCCINT	AD5
NA	VCCINT	AD35
NA	VCCINT	AE5
NA	VCCINT	AE35
NA	VCCINT	AL5
NA	VCCINT	AL35
NA	VCCINT	AM5
NA	VCCINT	AM35
NA	VCCINT	AR8
NA	VCCINT	AR9
NA	VCCINT	AR15
NA	VCCINT	AR16
NA	VCCINT	AR24
NA	VCCINT	AR25
NA	VCCINT	AR31
NA	VCCINT	AR32

Table 22: **FG680 - XCV600E, XCV1000E, XCV1600E, XCV2000E**

Bank	Pin Description	Pin #
0	VCCO	E34
0	VCCO	E33
0	VCCO	E30
0	VCCO	E29
0	VCCO	E27
0	VCCO	E26
1	VCCO	E10
1	VCCO	E11
1	VCCO	E13
1	VCCO	E14
1	VCCO	E6
1	VCCO	E7
2	VCCO	P5
2	VCCO	N5
2	VCCO	L5
2	VCCO	K5
2	VCCO	G5
2	VCCO	F5
3	VCCO	AP5
3	VCCO	AN5
3	VCCO	AK5
3	VCCO	AJ5
3	VCCO	AG5
3	VCCO	AF5
4	VCCO	AR10
4	VCCO	AR11
4	VCCO	AR13
4	VCCO	AR14
4	VCCO	AR6
4	VCCO	AR7
5	VCCO	AR34
5	VCCO	AR33
5	VCCO	AR30
5	VCCO	AR29
5	VCCO	AR27

Table 22: **FG680 - XCV600E, XCV1000E, XCV1600E, XCV2000E**

Bank	Pin Description	Pin #
5	VCCO	AR26
6	VCCO	AP35
6	VCCO	AN35
6	VCCO	AK35
6	VCCO	AJ35
6	VCCO	AG35
6	VCCO	AF35
7	VCCO	P35
7	VCCO	N35
7	VCCO	L35
7	VCCO	K35
7	VCCO	G35
7	VCCO	F35
NA	GND	Y5
NA	GND	Y4
NA	GND	Y37
NA	GND	Y36
NA	GND	Y35
NA	GND	Y3
NA	GND	W5
NA	GND	W35
NA	GND	M5
NA	GND	M4
NA	GND	M36
NA	GND	M35
NA	GND	E5
NA	GND	E35
NA	GND	E28
NA	GND	E21
NA	GND	E20
NA	GND	E19
NA	GND	E12
NA	GND	D4
NA	GND	D36
NA	GND	D28

Table 22: **FG680 - XCV600E, XCV1000E, XCV1600E, XCV2000E**

Bank	Pin Description	Pin #
NA	GND	D20
NA	GND	D12
NA	GND	C39
NA	GND	C37
NA	GND	C3
NA	GND	C20
NA	GND	C1
NA	GND	B39
NA	GND	B38
NA	GND	B2
NA	GND	B1
NA	GND	AW39
NA	GND	AW38
NA	GND	AW37
NA	GND	AW3
NA	GND	AW2
NA	GND	AW1
NA	GND	AV39
NA	GND	AV38
NA	GND	AV2
NA	GND	AV1
NA	GND	AU39
NA	GND	AU37
NA	GND	AU3
NA	GND	AU20
NA	GND	AU1
NA	GND	AT4
NA	GND	AT36
NA	GND	AT28
NA	GND	AT20
NA	GND	AT12
NA	GND	AR5
NA	GND	AR35
NA	GND	AR28
NA	GND	AR21
NA	GND	AR20

Table 22: **FG680 - XCV600E, XCV1000E, XCV1600E, XCV2000E**

Bank	Pin Description	Pin #
NA	GND	AR19
NA	GND	AR12
NA	GND	AH5
NA	GND	AH4
NA	GND	AH36
NA	GND	AH35
NA	GND	AA5
NA	GND	AA35
NA	GND	A39
NA	GND	A38
NA	GND	A37
NA	GND	A3
NA	GND	A2
NA	GND	A1

Notes:
1. V_{REF} or I/O option only in the XCV1000E, 1600E, 2000E; otherwise, I/O option only.
2. V_{REF} or I/O option only in the XCV1600E, 2000E; otherwise, I/O option only.
3. V_{REF} or I/O option only in the XCV2000E; otherwise, I/O option only.

FG680 Differential Pin Pairs

Virtex-E devices have differential pin pairs that can also provide other functions when not used as a differential pair. A √ in the AO column indicates that the pin pair can be used as an asynchronous output for all devices provided in this package. Pairs with a note number in the AO column are device dependent. They can have asynchronous outputs if the pin pair are in the same CLB row and column in the device. Numbers in this column refer to footnotes that indicate which devices have pin pairs than can be asynchronous outputs. The Other Functions column indicates alternative function(s) not available when the pair is used as a differential pair or differential clock.

Table 23: **FG680 Differential Pin Pair Summary XCV600E, XCV1000E, XCV1600E, XCV2000E**

Pair	Bank	P Pin	N Pin	AO	Other Functions
GCLK LVDS					
3	0	A20	C22	NA	IO_DLL_L29N
2	1	D21	A19	NA	IO_DLL_L29P
1	5	AU22	AT22	NA	IO_DLL_L155N
0	4	AW19	AT21	NA	IO_DLL_L155P
IO LVDS Total Pairs: 247, Asynchronous Output Pairs: 111					
0	0	A36	C35	5	-
1	0	B35	D34	5	VREF
2	0	A35	C34	√	-
3	0	B34	D33	√	VREF
4	0	A34	C33	3	-
5	0	B33	D32	3	-
6	0	D31	C32	√	-
7	0	C31	A33	√	VREF
8	0	B31	B32	5	-
9	0	D30	A32	5	VREF
10	0	C30	A31	√	-
11	0	D29	B30	√	VREF
12	0	C29	A30	2	-
13	0	B29	A29	2	-
14	0	A28	B28	√	VREF
15	0	B27	C28	√	-
16	0	A27	D27	5	-
17	0	B26	C27	5	-

Table 23: **FG680 Differential Pin Pair Summary XCV600E, XCV1000E, XCV1600E, XCV2000E**

Pair	Bank	P Pin	N Pin	AO	Other Functions
18	0	C26	D26	√	-
19	0	D25	A26	√	VREF
20	0	C25	B25	3	-
21	0	D24	A25	3	-
22	0	B23	A24	√	-
23	0	A23	C24	√	VREF
24	0	B22	B24	5	-
25	0	A22	E23	5	-
26	0	B21	D23	√	-
27	0	A21	C23	√	VREF
28	0	B20	E22	2	-
29	1	A19	C22	NA	IO_LVDS_DLL
30	1	B19	C21	2	VREF
31	1	A18	C19	2	-
32	1	B18	D19	√	VREF
33	1	A17	C18	√	-
34	1	B17	D18	5	-
35	1	A16	E18	5	-
36	1	D17	C17	√	VREF
37	1	E17	B16	√	-
38	1	C16	A15	3	-
39	1	D16	B15	3	-
40	1	B14	A14	√	VREF
41	1	A13	C15	√	-
42	1	B13	D15	5	-
43	1	A12	C14	5	-
44	1	C13	D14	√	-
45	1	D13	B12	√	VREF
46	1	C12	A11	2	-
47	1	C11	B11	2	-
48	1	D11	A10	√	VREF
49	1	C10	B10	√	-
50	1	D10	A9	5	VREF
51	1	C9	B9	5	-

Table 23: **FG680 Differential Pin Pair Summary XCV600E, XCV1000E, XCV1600E, XCV2000E**

Pair	Bank	P Pin	N Pin	AO	Other Functions
52	1	B8	A8	√	VREF
53	1	A7	D9	√	-
54	1	B7	C8	3	-
55	1	A6	D8	3	-
56	1	B6	C7	√	VREF
57	1	A5	D7	√	-
58	1	B5	C6	5	VREF
59	1	A4	D6	5	-
60	1	D5	B4	√	CS
61	2	E3	C2	√	DIN, D0
62	2	D3	F3	6	-
63	2	D2	G4	4	VREF
64	2	G3	E2	4	-
65	2	H4	E1	6	VREF
66	2	H3	F2	√	-
67	2	J4	F1	4	-
68	2	J3	G2	6	-
69	2	G1	K4	√	VREF
70	2	H2	K3	√	-
71	2	H1	L4	7	VREF
72	2	J2	L3	4	-
73	2	J1	M3	√	VREF
74	2	K2	N4	√	-
75	2	K1	N3	4	-
76	2	L2	P4	√	D1
77	2	P3	L1	√	D2
78	2	R4	M2	6	-
79	2	R3	M1	4	-
80	2	T4	N2	4	-
81	2	N1	T3	6	VREF
82	2	P2	U5	√	-
83	2	P1	U4	4	-
84	2	R2	U3	6	-
85	2	V5	R1	√	D3

Table 23: **FG680 Differential Pin Pair Summary XCV600E, XCV1000E, XCV1600E, XCV2000E**

Pair	Bank	P Pin	N Pin	AO	Other Functions
86	2	V4	T2	√	-
87	2	V3	T1	7	-
88	2	W4	U2	4	-
89	2	W3	U1	√	VREF
90	2	AA3	V2	√	-
91	2	AA4	V1	4	VREF
92	2	AB2	W2	√	-
93	3	AB4	W1	4	VREF
94	3	AB5	Y2	√	-
95	3	AC2	Y1	√	VREF
96	3	AC3	AA1	4	-
97	3	AC4	AA2	7	-
98	3	AC5	AB1	√	-
99	3	AD3	AC1	√	VREF
100	3	AD1	AD4	6	-
101	3	AD2	AE3	4	-
102	3	AE1	AE4	√	-
103	3	AE2	AF3	6	VREF
104	3	AF4	AF1	4	-
105	3	AG3	AF2	4	-
106	3	AG4	AG1	6	-
107	3	AH3	AG2	√	D5
108	3	AH1	AJ2	√	VREF
109	3	AH2	AJ3	4	-
110	3	AJ1	AJ4	√	-
111	3	AK1	AK3	√	VREF
112	3	AK2	AK4	4	-
113	3	AL1	AL2	7	VREF
114	3	AM1	AL3	√	-
115	3	AM2	AL4	√	VREF
116	3	AM3	AN1	6	-
117	3	AM4	AP1	4	-
118	3	AN2	AP2	√	-
119	3	AN3	AR1	6	VREF

Table 23: **FG680 Differential Pin Pair Summary XCV600E, XCV1000E, XCV1600E, XCV2000E**

Pair	Bank	P Pin	N Pin	AO	Other Functions
120	3	AN4	AT1	4	-
121	3	AR2	AP4	4	VREF
122	3	AT2	AR3	6	-
123	3	AR4	AU2	√	INIT
124	4	AU4	AV5	√	-
125	4	AT6	AV4	5	-
126	4	AU6	AW4	5	VREF
127	4	AT7	AW5	√	-
128	4	AU7	AV6	√	VREF
129	4	AT8	AW6	3	-
130	4	AU8	AV7	3	-
131	4	AT9	AW7	√	-
132	4	AV8	AU9	√	VREF
133	4	AW8	AT10	5	-
134	4	AV9	AU10	5	VREF
135	4	AW9	AT11	√	-
136	4	AV10	AU11	√	VREF
137	4	AW10	AU12	2	-
138	4	AV11	AT13	2	-
139	4	AW11	AU13	√	VREF
140	4	AT14	AV12	√	-
141	4	AU14	AW12	5	-
142	4	AT15	AV13	5	-
143	4	AU15	AW13	√	-
144	4	AV14	AT16	√	VREF
145	4	AW14	AU16	3	-
146	4	AV15	AR17	3	-
147	4	AW15	AT17	√	-
148	4	AU17	AV16	√	VREF
149	4	AR18	AW16	5	-
150	4	AT18	AV17	5	-
151	4	AU18	AW17	√	-
152	4	AT19	AV18	√	VREF
153	4	AU19	AW18	2	-

Table 23: **FG680 Differential Pin Pair Summary XCV600E, XCV1000E, XCV1600E, XCV2000E**

Pair	Bank	P Pin	N Pin	AO	Other Functions
154	4	AU21	AV19	2	VREF
155	5	AT21	AT22	NA	IO_LVDS_DLL
156	5	AV20	AR22	8	VREF
157	5	AV23	AW21	√	VREF
158	5	AU23	AV21	√	-
159	5	AT23	AW22	5	-
160	5	AR23	AV22	5	-
161	5	AV24	AW23	√	VREF
162	5	AW24	AU24	√	-
163	5	AW25	AT24	3	-
164	5	AV25	AU25	3	-
165	5	AW26	AT25	√	VREF
166	5	AV26	AW27	√	-
167	5	AU26	AV27	5	-
168	5	AT26	AW28	5	-
169	5	AU27	AV28	√	-
170	5	AW29	AT27	√	VREF
171	5	AW30	AU28	2	-
172	5	AV30	AV29	2	-
173	5	AW31	AU29	√	VREF
174	5	AV31	AT29	√	-
175	5	AW32	AU30	5	VREF
176	5	AW33	AT30	5	-
177	5	AV33	AU31	√	VREF
178	5	AT31	AW34	√	-
179	5	AV32	AV34	3	-
180	5	AU32	AW35	3	-
181	5	AT32	AV35	√	VREF
182	5	AU33	AW36	√	-
183	5	AT33	AV36	5	VREF
184	5	AU34	AU36	5	-
185	6	AT38	AR36	√	-
186	6	AP36	AR38	6	-
187	6	AP37	AT39	4	VREF

Table 23: **FG680 Differential Pin Pair Summary XCV600E, XCV1000E, XCV1600E, XCV2000E**

Pair	Bank	P Pin	N Pin	AO	Other Functions
188	6	AP39	AP38	4	-
189	6	AN38	AN36	6	VREF
190	6	AN39	AN37	√	-
191	6	AM38	AM36	4	-
192	6	AL36	AM37	6	-
193	6	AL37	AM39	√	VREF
194	6	AK36	AL38	√	-
195	6	AK37	AL39	7	VREF
196	6	AJ36	AK38	4	-
197	6	AJ37	AK39	√	VREF
198	6	AH37	AJ38	√	-
199	6	AH38	AJ39	4	-
200	6	AG38	AH39	√	VREF
201	6	AG39	AG36	√	-
202	6	AF39	AG37	6	-
203	6	AE38	AF36	4	-
204	6	AF38	AF37	4	-
205	6	AE36	AE39	6	VREF
206	6	AE37	AD38	√	-
207	6	AD36	AD39	4	-
208	6	AC39	AC38	6	-
209	6	AB38	AD37	√	VREF
210	6	AB39	AC35	√	-
211	6	AA38	AC36	7	-
212	6	AA39	AC37	4	-
213	6	Y38	AB35	√	VREF
214	6	Y39	AB36	√	-
215	6	AA36	AB37	4	VREF
216	7	W38	AA37	√	-
217	7	V39	W37	4	VREF
218	7	U39	W36	√	-
219	7	U38	V38	√	VREF
220	7	T39	V37	4	-
221	7	T38	V36	7	-

Table 23: **FG680 Differential Pin Pair Summary XCV600E, XCV1000E, XCV1600E, XCV2000E**

Pair	Bank	P Pin	N Pin	AO	Other Functions
222	7	R39	V35	√	-
223	7	U36	U37	√	VREF
224	7	U35	R38	6	-
225	7	T37	P39	4	-
226	7	T36	P38	√	-
227	7	N38	N39	6	VREF
228	7	M39	R37	4	-
229	7	M38	R36	4	-
230	7	L39	P37	6	-
231	7	N37	P36	√	-
232	7	N36	L38	√	VREF
233	7	M37	K39	4	-
234	7	L37	K38	√	-
235	7	L36	J39	√	VREF
236	7	K37	J38	4	-
237	7	K36	H39	√	VREF
238	7	J37	H38	√	-
239	7	G38	G39	√	VREF
240	7	F39	J36	6	-
241	7	F38	H37	4	-
242	7	E39	H36	√	-
243	7	E38	G37	6	VREF
244	7	D39	G36	4	-
245	7	F36	D38	4	VREF
246	7	E37	D37	6	-

Notes:
1. AO in the XCV1000E, 1600E, 2000E.
2. AO in the XCV600E, 1000E, 1600E.
3. AO in the XCV600E, 1000E.
4. AO in the XCV1000E, 1600E.
5. AO in the XCV1000E, 2000E.
6. AO in the XCV600E, 1000E, 2000E.
7. AO in the XCV1000E.
8. AO in the XCV2000E.

FG860 Fine-Pitch Ball Grid Array Package

XCV1000E, XCV1600E, and XCV2000E devices in the FG680 fine-pitch Ball Grid Array package have footprint compatibility. Pins labeled I0_VREF can be used as either in all parts unless device-dependent as indicated in the footnotes. If the pin is not used as V_{REF}, it can be used as general I/O. Immediately following Table 24, see Table 25 for Differential Pair information.

Table 24: **FG860 — XCV1000E, XCV1600E, XCV2000E**

Bank	Pin Description	Pin #
0	GCK3	C22
0	IO	A26
0	IO	B31
0	IO	B34
0	IO	C24
0	IO	C29
0	IO	C34
0	IO	D24
0	IO	D36
0	IO	D40
0	IO	E26
0	IO	E28
0	IO	E35
0	IO_L0N_Y	A38
0	IO_L0P_Y	D38
0	IO_L1N_Y	B37
0	IO_L1P_Y	E37
0	IO_VREF_L2N_Y	A37
0	IO_L2P_Y	C39
0	IO_L3N_Y	B36
0	IO_L3P_Y	C38
0	IO_L4N_YY	A36
0	IO_L4P_YY	B35
0	IO_VREF_L5N_YY	A35
0	IO_L5P_YY	D37
0	IO_L6N_Y	C37
0	IO_L6P_Y	A34
0	IO_L7N_Y	E36
0	IO_L7P_Y	B33
0	IO_L8N_YY	A33

Table 24: **FG860 — XCV1000E, XCV1600E, XCV2000E**

Bank	Pin Description	Pin #
0	IO_L8P_YY	C32
0	IO_VREF_L9N_YY	C36
0	IO_L9P_YY	B32
0	IO_L10N_Y	A32
0	IO_L10P_Y	D35
0	IO_VREF_L11N_Y	C31[2]
0	IO_L11P_Y	C35
0	IO_L12N_YY	E34
0	IO_L12P_YY	A31
0	IO_VREF_L13N_YY	D34
0	IO_L13P_YY	C30
0	IO_L14N_Y	B30
0	IO_L14P_Y	E33
0	IO_L15N_Y	A30
0	IO_L15P_Y	D33
0	IO_VREF_L16N_YY	C33
0	IO_L16P_YY	B29
0	IO_L17N_YY	E32
0	IO_L17P_YY	A29
0	IO_L18N_Y	D32
0	IO_L18P_Y	C28
0	IO_L19N_Y	E31
0	IO_L19P_Y	B28
0	IO_L20N_Y	D31
0	IO_L20P_Y	A28
0	IO_L21N_Y	D30
0	IO_L21P_Y	C27
0	IO_L22N_YY	E29
0	IO_L22P_YY	B27
0	IO_VREF_L23N_YY	D29
0	IO_L23P_YY	A27
0	IO_L24N_Y	C26
0	IO_L24P_Y	D28
0	IO_L25N_Y	B26
0	IO_L25P_Y	F27
0	IO_L26N_YY	E27
0	IO_L26P_YY	C25

Table 24: **FG860 — XCV1000E, XCV1600E, XCV2000E**

Bank	Pin Description	Pin #
0	IO_VREF_L27N_YY	D27
0	IO_L27P_YY	B25
0	IO_L28N_Y	A25
0	IO_L28P_Y	D26
0	IO_L29N_Y	A24
0	IO_L29P_Y	E25
0	IO_L30N_YY	D25
0	IO_L30P_YY	B24
0	IO_VREF_L31N_YY	E24
0	IO_L31P_YY	A23
0	IO_L32N_Y	C23
0	IO_L32P_Y	E23
0	IO_VREF_L33N_Y	B23[1]
0	IO_L33P_Y	D23
0	IO_LVDS_DLL_L34N	A22
1	GCK2	B22
1	IO	A14
1	IO	A20
1	IO	B11
1	IO	B13
1	IO	C8
1	IO	C18
1	IO	C21
1	IO	D7
1	IO	D10
1	IO	D15
1	IO	D17
1	IO	E20
1	IO_LVDS_DLL_L34P	D22
1	IO_L35N_Y	D21
1	IO_VREF_L35P_Y	B21[1]
1	IO_L36N_Y	D20
1	IO_L36P_Y	A21
1	IO_L37N_YY	C20
1	IO_VREF_L37P_YY	D19
1	IO_L38N_YY	B20

Table 24: **FG860 — XCV1000E, XCV1600E, XCV2000E**

Bank	Pin Description	Pin #
1	IO_L38P_YY	E19
1	IO_L39N_Y	D18
1	IO_L39P_Y	A19
1	IO_L40N_Y	E18
1	IO_L40P_Y	C19
1	IO_L41N_YY	B19
1	IO_VREF_L41P_YY	E17
1	IO_L42N_YY	A18
1	IO_L42P_YY	D16
1	IO_L43N_Y	E16
1	IO_L43P_Y	B18
1	IO_L44N_Y	F16
1	IO_L44P_Y	A17
1	IO_L45N_YY	C17
1	IO_VREF_L45P_YY	E15
1	IO_L46N_YY	B17
1	IO_L46P_YY	D14
1	IO_L47N_Y	A16
1	IO_L47P_Y	E14
1	IO_L48N_Y	C16
1	IO_L48P_Y	D13
1	IO_L49N_Y	B16
1	IO_L49P_Y	D12
1	IO_L50N_Y	A15
1	IO_L50P_Y	E12
1	IO_L51N_YY	C15
1	IO_L51P_YY	C11
1	IO_L52N_YY	B15
1	IO_VREF_L52P_YY	D11
1	IO_L53N_Y	E11
1	IO_L53P_Y	C14
1	IO_L54N_Y	C10
1	IO_L54P_Y	B14
1	IO_L55N_YY	A13
1	IO_VREF_L55P_YY	E10
1	IO_L56N_YY	C13
1	IO_L56P_YY	C9

Table 24: **FG860 — XCV1000E, XCV1600E, XCV2000E**

Bank	Pin Description	Pin #
1	IO_L57N_Y	D9
1	IO_VREF_L57P_Y	A12[2]
1	IO_L58N_Y	E9
1	IO_L58P_Y	C12
1	IO_L59N_YY	B12
1	IO_VREF_L59P_YY	D8
1	IO_L60N_YY	A11
1	IO_L60P_YY	E8
1	IO_L61N_Y	C7
1	IO_L61P_Y	A10
1	IO_L62N_Y	C6
1	IO_L62P_Y	B10
1	IO_L63N_YY	A9
1	IO_VREF_L63P_YY	B9
1	IO_L64N_YY	A8
1	IO_L64P_YY	E7
1	IO_L65N_Y	B8
1	IO_L65P_Y	C5
1	IO_L66N_Y	A7
1	IO_VREF_L66P_Y	A6
1	IO_L67N_Y	B7
1	IO_L67P_Y	D6
1	IO_L68N_Y	A5
1	IO_L68P_Y	C4
1	IO_WRITE_L69N_YY	B6
1	IO_CS_L69P_YY	E6
2	IO	H2
2	IO	H3
2	IO	J1
2	IO	K5
2	IO	M2
2	IO	N1
2	IO	R5
2	IO	U1
2	IO	U4
2	IO	W3

Table 24: **FG860 — XCV1000E, XCV1600E, XCV2000E**

Bank	Pin Description	Pin #
2	IO	Y3
2	IO	AA3
2	IO_DOUT_BUSY_L70P_YY	F5
2	IO_DIN_D0_L70N_YY	D2
2	IO_L71P_Y	E4
2	IO_L71N_Y	E2
2	IO_L72P_Y	D3
2	IO_L72N_Y	F2
2	IO_VREF_L73P_Y	E1
2	IO_L73N_Y	F4
2	IO_L74P	G2
2	IO_L74N	E3
2	IO_L75P_Y	F1
2	IO_L75N_Y	G5
2	IO_VREF_L76P_Y	G1
2	IO_L76N_Y	F3
2	IO_L77P_YY	G4
2	IO_L77N_YY	H1
2	IO_L78P_Y	J2
2	IO_L78N_Y	G3
2	IO_L79P_Y	H5
2	IO_L79N_Y	K2
2	IO_VREF_L80P_YY	H4
2	IO_L80N_YY	K1
2	IO_L81P_YY	L2
2	IO_L81N_YY	L3
2	IO_VREF_L82P_Y	L1[2]
2	IO_L82N_Y	J5
2	IO_L83P_Y	J4
2	IO_L83N_Y	M3
2	IO_VREF_L84P_YY	J3
2	IO_L84N_YY	M1
2	IO_L85P_YY	N2
2	IO_L85N_YY	K4
2	IO_L86P_Y	N3
2	IO_L86N_Y	K3
2	IO_VREF_L87P_YY	L5

Table 24: **FG860 — XCV1000E, XCV1600E, XCV2000E**

Bank	Pin Description	Pin #
2	IO_D1_L87N_YY	P2
2	IO_D2_L88P_YY	P3
2	IO_L88N_YY	L4
2	IO_L89P_Y	P1
2	IO_L89N_Y	R2
2	IO_L90P_Y	M5
2	IO_L90N_Y	R3
2	IO_L91P_Y	M4
2	IO_L91N_Y	R1
2	IO_L92P	N4
2	IO_L92N	T2
2	IO_L93P_Y	P5
2	IO_L93N_Y	T3
2	IO_VREF_L94P_Y	P4
2	IO_L94N_Y	T1
2	IO_L95P_YY	U2
2	IO_L95N_YY	R4
2	IO_L96P_Y	U3
2	IO_L96N_Y	T5
2	IO_L97P_Y	T4
2	IO_L97N_Y	V2
2	IO_VREF_L98P_YY	U5
2	IO_D3_L98N_YY	V3
2	IO_L99P_YY	V1
2	IO_L99N_YY	V5
2	IO_L100P_Y	W2
2	IO_L100N_Y	V4
2	IO_L101P_Y	W5
2	IO_L101N_Y	W1
2	IO_VREF_L102P_YY	Y2
2	IO_L102N_YY	W4
2	IO_L103P_YY	Y1
2	IO_L103N_YY	Y5
2	IO_VREF_L104P_Y	AA1[1]
2	IO_L104N_Y	Y4
2	IO_L105P_YY	AA4
2	IO_L105N_YY	AA2

Table 24: **FG860 — XCV1000E, XCV1600E, XCV2000E**

Bank	Pin Description	Pin #
3	IO	AB4
3	IO	AC2
3	IO	AD1
3	IO	AE3
3	IO	AF4
3	IO	AH5
3	IO	AJ2
3	IO	AL1
3	IO	AM3
3	IO	AP3
3	IO	AR5
3	IO	AU4
3	IO	AB2
3	IO_L106P_Y	AB3
3	IO_VREF_L106N_Y	AC4[1]
3	IO_L107P_YY	AB1
3	IO_L107N_YY	AC5
3	IO_L108P_YY	AD4
3	IO_VREF_L108N_YY	AC3
3	IO_L109P_Y	AC1
3	IO_L109N_Y	AD5
3	IO_L110P_Y	AE4
3	IO_L110N_Y	AD3
3	IO_L111P_YY	AE5
3	IO_L111N_YY	AD2
3	IO_D4_L112P_YY	AE1
3	IO_VREF_L112N_YY	AF5
3	IO_L113P_Y	AE2
3	IO_L113N_Y	AG4
3	IO_L114P_Y	AG5
3	IO_L114N_Y	AF1
3	IO_L115P_YY	AH4
3	IO_L115N_YY	AF2
3	IO_L116P_Y	AF3
3	IO_VREF_L116N_Y	AJ4
3	IO_L117P_Y	AG1

Table 24: **FG860 — XCV1000E, XCV1600E, XCV2000E**

Bank	Pin Description	Pin #
3	IO_L117N_Y	AJ5
3	IO_L118P	AG2
3	IO_L118N	AK4
3	IO_L119P_Y	AG3
3	IO_L119N_Y	AL4
3	IO_L120P_Y	AH1
3	IO_L120N_Y	AL5
3	IO_L121P_Y	AH2
3	IO_L121N_Y	AM4
3	IO_L122P_YY	AH3
3	IO_D5_L122N_YY	AM5
3	IO_D6_L123P_YY	AJ1
3	IO_VREF_L123N_YY	AN3
3	IO_L124P_Y	AN4
3	IO_L124N_Y	AJ3
3	IO_L125P_YY	AN5
3	IO_L125N_YY	AK1
3	IO_L126P_YY	AK2
3	IO_VREF_L126N_YY	AP4
3	IO_L127P_Y	AK3
3	IO_L127N_Y	AP5
3	IO_L128P_Y	AR3
3	IO_VREF_L128N_Y	AL2[2]
3	IO_L129P_YY	AR4
3	IO_L129N_YY	AL3
3	IO_L130P_YY	AM1
3	IO_VREF_L130N_YY	AT3
3	IO_L131P_Y	AM2
3	IO_L131N_Y	AT4
3	IO_L132P_Y	AT5
3	IO_L132N_Y	AN1
3	IO_L133P_YY	AU3
3	IO_L133N_YY	AN2
3	IO_L134P_Y	AP1
3	IO_VREF_L134N_Y	AP2
3	IO_L135P_Y	AR1
3	IO_L135N_Y	AV3

Table 24: **FG860 — XCV1000E, XCV1600E, XCV2000E**

Bank	Pin Description	Pin #
3	IO_L136P	AR2
3	IO_L136N	AT1
3	IO_L137P_Y	AV4
3	IO_VREF_L137N_Y	AT2
3	IO_L138P_Y	AU1
3	IO_L138N_Y	AU5
3	IO_L139P_Y	AU2
3	IO_L139N_Y	AW3
3	IO_D7_L140P_YY	AV1
3	IO_INIT_L140N_YY	AW5
4	GCK0	BA22
4	IO	AV17
4	IO	AY11
4	IO	AY12
4	IO	AY13
4	IO	AY14
4	IO	BA8
4	IO	BA17
4	IO	BA19
4	IO	BA20
4	IO	BA21
4	IO	BB9
4	IO	BB18
4	IO_L141P_YY	AV6
4	IO_L141N_YY	BA4
4	IO_L142P_Y	AY4
4	IO_L142N_Y	BA5
4	IO_L143P_Y	AW6
4	IO_L143N_Y	BB5
4	IO_VREF_L144P_Y	BA6
4	IO_L144N_Y	AY5
4	IO_L145P_Y	BB6
4	IO_L145N_Y	AY6
4	IO_L146P_YY	BA7
4	IO_L146N_YY	AV7
4	IO_VREF_L147P_YY	BB7

Table 24: **FG860 — XCV1000E, XCV1600E, XCV2000E**

Bank	Pin Description	Pin #
4	IO_L147N_YY	AW7
4	IO_L148P_Y	AY7
4	IO_L148N_Y	BB8
4	IO_L149P_Y	BA9
4	IO_L149N_Y	AV8
4	IO_L150P_YY	AW8
4	IO_L150N_YY	BA10
4	IO_VREF_L151P_YY	BB10
4	IO_L151N_YY	AY8
4	IO_L152P_Y	AV9
4	IO_L152N_Y	BA11
4	IO_VREF_L153P_Y	BB11[2]
4	IO_L153N_Y	AW9
4	IO_L154P_YY	AY9
4	IO_L154N_YY	BA12
4	IO_VREF_L155P_YY	BB12
4	IO_L155N_YY	AV10
4	IO_L156P_Y	BA13
4	IO_L156N_Y	AW10
4	IO_L157P_Y	BB13
4	IO_L157N_Y	AY10
4	IO_VREF_L158P_YY	AV11
4	IO_L158N_YY	BA14
4	IO_L159P_YY	AW11
4	IO_L159N_YY	BB14
4	IO_L160P_Y	AV12
4	IO_L160N_Y	BA15
4	IO_L161P_Y	AW12
4	IO_L161N_Y	AY15
4	IO_L162P_Y	AW13
4	IO_L162N_Y	BB15
4	IO_L163P_Y	AV14
4	IO_L163N_Y	BA16
4	IO_L164P_YY	AW14
4	IO_L164N_YY	AY16
4	IO_VREF_L165P_YY	BB16
4	IO_L165N_YY	AV15

Table 24: **FG860 — XCV1000E, XCV1600E, XCV2000E**

Bank	Pin Description	Pin #
4	IO_L166P_Y	AY17
4	IO_L166N_Y	AW15
4	IO_L167P_Y	BB17
4	IO_L167N_Y	AU16
4	IO_L168P_YY	AV16
4	IO_L168N_YY	AY18
4	IO_VREF_L169P_YY	AW16
4	IO_L169N_YY	BA18
4	IO_L170P_Y	BB19
4	IO_L170N_Y	AW17
4	IO_L171P_Y	AY19
4	IO_L171N_Y	AV18
4	IO_L172P_YY	AW18
4	IO_L172N_YY	BB20
4	IO_VREF_L173P_YY	AY20
4	IO_L173N_YY	AV19
4	IO_L174P_Y	BB21
4	IO_L174N_Y	AW19
4	IO_VREF_L175P_Y	AY21[1]
4	IO_L175N_Y	AV20
4	IO_LVDS_DLL_L176P	AW20
5	GCK1	AY22
5	IO	AV24
5	IO	AV34
5	IO	AW27
5	IO	AW36
5	IO	AY23
5	IO	AY31
5	IO	AY33
5	IO	BA26
5	IO	BA29
5	IO	BA33
5	IO	BB25
5	IO_LVDS_DLL_L176N	AW21
5	IO_L177P_Y	BB22
5	IO_VREF_L177N_Y	AW22[1]

Table 24: **FG860 — XCV1000E, XCV1600E, XCV2000E**

Bank	Pin Description	Pin #
5	IO_L178P_Y	BB23
5	IO_L178N_Y	AW23
5	IO_L179P_YY	AV23
5	IO_VREF_L179N_YY	BA23
5	IO_L180P_YY	AW24
5	IO_L180N_YY	BB24
5	IO_L181P_Y	AY24
5	IO_L181N_Y	AW25
5	IO_L182P_Y	BA24
5	IO_L182N_Y	AV25
5	IO_L183P_YY	AW26
5	IO_VREF_L183N_YY	AY25
5	IO_L184P_YY	AV26
5	IO_L184N_YY	BA25
5	IO_L185P_Y	BB26
5	IO_L185N_Y	AV27
5	IO_L186P_Y	AY26
5	IO_L186N_Y	AU27
5	IO_L187P_YY	AW28
5	IO_VREF_L187N_YY	BB27
5	IO_L188P_YY	AY27
5	IO_L188N_YY	AV28
5	IO_L189P_Y	BA27
5	IO_L189N_Y	AW29
5	IO_L190P_Y	BB28
5	IO_L190N_Y	AV29
5	IO_L191P_Y	AY28
5	IO_L191N_Y	AW30
5	IO_L192P_Y	BA28
5	IO_L192N_Y	AW31
5	IO_L193P_YY	BB29
5	IO_L193N_YY	AV31
5	IO_L194P_YY	AY29
5	IO_VREF_L194N_YY	AY32
5	IO_L195P_Y	AW32
5	IO_L195N_Y	BB30
5	IO_L196P_Y	AV32

Table 24: **FG860 — XCV1000E, XCV1600E, XCV2000E**

Bank	Pin Description	Pin #
5	IO_L196N_Y	AY30
5	IO_L197P_YY	BA30
5	IO_VREF_L197N_YY	AW33
5	IO_L198P_YY	BB31
5	IO_L198N_YY	AV33
5	IO_L199P_Y	AY34
5	IO_VREF_L199N_Y	BA31[2]
5	IO_L200P_Y	AW34
5	IO_L200N_Y	BB32
5	IO_L201P_YY	BA32
5	IO_VREF_L201N_YY	AY35
5	IO_L202P_YY	BB33
5	IO_L202N_YY	AW35
5	IO_L203P_Y	AV35
5	IO_L203N_Y	BB34
5	IO_L204P_Y	AY36
5	IO_L204N_Y	BA34
5	IO_L205P_YY	BB35
5	IO_VREF_L205N_YY	AV36
5	IO_L206P_YY	BA35
5	IO_L206N_YY	AY37
5	IO_L207P_Y	BB36
5	IO_L207N_Y	BA36
5	IO_L208P_Y	AW37
5	IO_VREF_L208N_Y	BB37
5	IO_L209P_Y	BA37
5	IO_L209N_Y	AY38
5	IO_L210P_Y	BB38
5	IO_L210N_Y	AY39
6	IO	AA40
6	IO	AB41
6	IO	AC42
6	IO	AD39
6	IO	AE40
6	IO	AF38
6	IO	AF40

Table 24: **FG860 — XCV1000E, XCV1600E, XCV2000E**

Bank	Pin Description	Pin #
6	IO	AJ40
6	IO	AL41
6	IO	AN38
6	IO	AN42
6	IO	AP41
6	IO	AR39
6	IO_L211N_YY	AV41
6	IO_L211P_YY	AV42
6	IO_L212N_Y	AW40
6	IO_L212P_Y	AU41
6	IO_L213N_Y	AV39
6	IO_L213P_Y	AU42
6	IO_VREF_L214N_Y	AT41
6	IO_L214P_Y	AU38
6	IO_L215N	AT42
6	IO_L215P	AV40
6	IO_L216N_Y	AR41
6	IO_L216P_Y	AU39
6	IO_VREF_L217N_Y	AR42
6	IO_L217P_Y	AU40
6	IO_L218N_YY	AT38
6	IO_L218P_YY	AP42
6	IO_L219N_Y	AN41
6	IO_L219P_Y	AT39
6	IO_L220N_Y	AT40
6	IO_L220P_Y	AM40
6	IO_VREF_L221N_YY	AR38
6	IO_L221P_YY	AM41
6	IO_L222N_YY	AM42
6	IO_L222P_YY	AR40
6	IO_VREF_L223N_Y	AL40[2]
6	IO_L223P_Y	AP38
6	IO_L224N_Y	AP39
6	IO_L224P_Y	AL42
6	IO_VREF_L225N_YY	AP40
6	IO_L225P_YY	AK40
6	IO_L226N_YY	AK41

Table 24: **FG860 — XCV1000E, XCV1600E, XCV2000E**

Bank	Pin Description	Pin #
6	IO_L226P_YY	AN39
6	IO_L227N_Y	AK42
6	IO_L227P_Y	AN40
6	IO_VREF_L228N_YY	AM38
6	IO_L228P_YY	AJ41
6	IO_L229N_YY	AJ42
6	IO_L229P_YY	AM39
6	IO_L230N_Y	AH40
6	IO_L230P_Y	AH41
6	IO_L231N_Y	AL38
6	IO_L231P_Y	AH42
6	IO_L232N_Y	AL39
6	IO_L232P_Y	AG41
6	IO_L233N	AK39
6	IO_L233P	AG40
6	IO_L234N_Y	AJ38
6	IO_L234P_Y	AG42
6	IO_VREF_L235N_Y	AF42
6	IO_L235P_Y	AJ39
6	IO_L236N_YY	AF41
6	IO_L236P_YY	AH38
6	IO_L237N_Y	AE42
6	IO_L237P_Y	AH39
6	IO_L238N_Y	AG38
6	IO_L238P_Y	AE41
6	IO_VREF_L239N_YY	AG39
6	IO_L239P_YY	AD42
6	IO_L240N_YY	AD40
6	IO_L240P_YY	AF39
6	IO_L241N_Y	AD41
6	IO_L241P_Y	AE38
6	IO_L242N_Y	AE39
6	IO_L242P_Y	AC40
6	IO_VREF_L243N_YY	AD38
6	IO_L243P_YY	AC41
6	IO_L244N_YY	AB42
6	IO_L244P_YY	AC38

Table 24: **FG860 — XCV1000E, XCV1600E, XCV2000E**

Bank	Pin Description	Pin #
6	IO_VREF_L245N_Y	AB40[1]
6	IO_L245P_Y	AC39
7	IO	F38
7	IO	H40
7	IO	H41
7	IO	J42
7	IO	K39
7	IO	L42
7	IO	N40
7	IO	T40
7	IO	U40
7	IO	V38
7	IO	W42
7	IO	Y42
7	IO	AA42
7	IO_L246N_YY	AA41
7	IO_L246P_YY	AB39
7	IO_L247N_Y	Y41
7	IO_VREF_L247P_Y	AA39[1]
7	IO_L248N_YY	Y40
7	IO_L248P_YY	Y39
7	IO_L249N_YY	Y38
7	IO_VREF_L249P_YY	W41
7	IO_L250N_Y	W40
7	IO_L250P_Y	W39
7	IO_L251N_Y	W38
7	IO_L251P_Y	V41
7	IO_L252N_YY	V39
7	IO_L252P_YY	V40
7	IO_L253N_YY	V42
7	IO_VREF_L253P_YY	U39
7	IO_L254N_Y	U41
7	IO_L254P_Y	U38
7	IO_L255N_Y	U42
7	IO_L255P_Y	T39
7	IO_L256N_YY	T41

Table 24: **FG860 — XCV1000E, XCV1600E, XCV2000E**

Bank	Pin Description	Pin #
7	IO_L256P_YY	T38
7	IO_L257N_Y	R39
7	IO_VREF_L257P_Y	T42
7	IO_L258N_Y	R42
7	IO_L258P_Y	R38
7	IO_L259N	R40
7	IO_L259P	P39
7	IO_L260N_Y	R41
7	IO_L260P_Y	P38
7	IO_L261N_Y	P42
7	IO_L261P_Y	N39
7	IO_L262N_Y	P40
7	IO_L262P_Y	M39
7	IO_L263N_YY	P41
7	IO_L263P_YY	M38
7	IO_L264N_YY	N42
7	IO_VREF_L264P_YY	L39
7	IO_L265N_Y	L38
7	IO_L265P_Y	N41
7	IO_L266N_YY	K40
7	IO_L266P_YY	M42
7	IO_L267N_YY	M40
7	IO_VREF_L267P_YY	K38
7	IO_L268N_Y	M41
7	IO_L268P_Y	J40
7	IO_L269N_Y	J39
7	IO_VREF_L269P_Y	L40
7	IO_L270N_YY	J38
7	IO_L270P_YY	L41
7	IO_L271N_YY	K42
7	IO_VREF_L271P_YY	H39
7	IO_L272N_Y	K41
7	IO_L272P_Y	H38
7	IO_L273N_Y	J41
7	IO_L273P_Y	G40
7	IO_L274N_YY	H42
7	IO_L274P_YY	G39

Table 24: **FG860 — XCV1000E, XCV1600E, XCV2000E**

Bank	Pin Description	Pin #
7	IO_L275N_Y	G38
7	IO_VREF_L275P_Y	G42
7	IO_L276N_Y	G41
7	IO_L276P_Y	F40
7	IO_L277N	F42
7	IO_L277P	F41
7	IO_L278N_Y	F39
7	IO_VREF_L278P_Y	E42
7	IO_L279N_Y	E40
7	IO_L279P_Y	E41
7	IO_L280N_Y	E39
7	IO_L280P_Y	D41
2	CCLK	B4
3	DONE	AW2
NA	DXN	BA38
NA	DXP	AW38
NA	M0	AW41
NA	M1	AV37
NA	M2	BA39
NA	PROGRAM	AV2
NA	TCK	B38
NA	TDI	B5
2	TDO	D5
NA	TMS	B39
NA	VCCINT	F9
NA	VCCINT	F10
NA	VCCINT	F17
NA	VCCINT	F18
NA	VCCINT	F25
NA	VCCINT	F26
NA	VCCINT	F33
NA	VCCINT	F34
NA	VCCINT	J6
NA	VCCINT	J37
NA	VCCINT	K6

Table 24: **FG860 — XCV1000E, XCV1600E, XCV2000E**

Bank	Pin Description	Pin #
NA	VCCINT	K37
NA	VCCINT	T6
NA	VCCINT	T37
NA	VCCINT	U6
NA	VCCINT	U37
NA	VCCINT	V6
NA	VCCINT	V37
NA	VCCINT	AE6
NA	VCCINT	AE37
NA	VCCINT	AF6
NA	VCCINT	AF37
NA	VCCINT	AG6
NA	VCCINT	AG37
NA	VCCINT	AN6
NA	VCCINT	AN37
NA	VCCINT	AP6
NA	VCCINT	AP37
NA	VCCINT	AU9
NA	VCCINT	AU10
NA	VCCINT	AU17
NA	VCCINT	AU18
NA	VCCINT	AU25
NA	VCCINT	AU26
NA	VCCINT	AU33
NA	VCCINT	AU34
NA	VCCO_0	F23
NA	VCCO_0	F24
NA	VCCO_0	F28
NA	VCCO_0	F29
NA	VCCO_0	F31
NA	VCCO_0	F32
NA	VCCO_0	F35
NA	VCCO_0	F36
NA	VCCO_1	F11
NA	VCCO_1	F12
NA	VCCO_1	F14

Table 24: **FG860 — XCV1000E, XCV1600E, XCV2000E**

Bank	Pin Description	Pin #
NA	VCCO_1	F15
NA	VCCO_1	F19
NA	VCCO_1	F20
NA	VCCO_1	F7
NA	VCCO_1	F8
NA	VCCO_2	G6
NA	VCCO_2	H6
NA	VCCO_2	L6
NA	VCCO_2	M6
NA	VCCO_2	P6
NA	VCCO_2	R6
NA	VCCO_2	W6
NA	VCCO_2	Y6
NA	VCCO_3	AC6
NA	VCCO_3	AD6
NA	VCCO_3	AH6
NA	VCCO_3	AJ6
NA	VCCO_3	AL6
NA	VCCO_3	AM6
NA	VCCO_3	AR6
NA	VCCO_3	AT6
NA	VCCO_4	AU11
NA	VCCO_4	AU12
NA	VCCO_4	AU14
NA	VCCO_4	AU15
NA	VCCO_4	AU19
NA	VCCO_4	AU20
NA	VCCO_4	AU7
NA	VCCO_4	AU8
NA	VCCO_5	AU23
NA	VCCO_5	AU24
NA	VCCO_5	AU28
NA	VCCO_5	AU29
NA	VCCO_5	AU31
NA	VCCO_5	AU32
NA	VCCO_5	AU35
NA	VCCO_5	AU36

Table 24: **FG860 — XCV1000E, XCV1600E, XCV2000E**

Bank	Pin Description	Pin #
NA	VCCO_6	AC37
NA	VCCO_6	AD37
NA	VCCO_6	AH37
NA	VCCO_6	AJ37
NA	VCCO_6	AL37
NA	VCCO_6	AM37
NA	VCCO_6	AR37
NA	VCCO_6	AT37
NA	VCCO_7	G37
NA	VCCO_7	H37
NA	VCCO_7	L37
NA	VCCO_7	M37
NA	VCCO_7	P37
NA	VCCO_7	R37
NA	VCCO_7	W37
NA	VCCO_7	Y37
NA	GND	N6
NA	GND	N5
NA	GND	N38
NA	GND	N37
NA	GND	F6
NA	GND	F37
NA	GND	F30
NA	GND	F22
NA	GND	F21
NA	GND	F13
NA	GND	E5
NA	GND	E38
NA	GND	E30
NA	GND	E22
NA	GND	E21
NA	GND	E13
NA	GND	D42
NA	GND	D4
NA	GND	D39
NA	GND	D1

Table 24: **FG860 — XCV1000E, XCV1600E, XCV2000E**

Bank	Pin Description	Pin #
NA	GND	C42
NA	GND	C41
NA	GND	C40
NA	GND	C3
NA	GND	C2
NA	GND	C1
NA	GND	BB41
NA	GND	BB40
NA	GND	BB4
NA	GND	BB39
NA	GND	BB3
NA	GND	BB2
NA	GND	BA42
NA	GND	BA41
NA	GND	BA40
NA	GND	BA3
NA	GND	BA2
NA	GND	BA1
NA	GND	B42
NA	GND	B41
NA	GND	B40
NA	GND	B3
NA	GND	B2
NA	GND	B1
NA	GND	AY42
NA	GND	AY41
NA	GND	AY40
NA	GND	AY3
NA	GND	AY2
NA	GND	AY1
NA	GND	AW42
NA	GND	AW4
NA	GND	AW39
NA	GND	AW1
NA	GND	AV5
NA	GND	AV38
NA	GND	AV30

Table 24: **FG860 — XCV1000E, XCV1600E, XCV2000E**

Bank	Pin Description	Pin #
NA	GND	AV22
NA	GND	AV21
NA	GND	AV13
NA	GND	AU6
NA	GND	AU37
NA	GND	AU30
NA	GND	AU22
NA	GND	AU21
NA	GND	AU13
NA	GND	AK6
NA	GND	AK5
NA	GND	AK38
NA	GND	AK37
NA	GND	AB6
NA	GND	AB5
NA	GND	AB38
NA	GND	AB37
NA	GND	AA6
NA	GND	AA5
NA	GND	AA38
NA	GND	AA37
NA	GND	A41
NA	GND	A40
NA	GND	A4
NA	GND	A39
NA	GND	A3
NA	GND	A2

Notes:

1. V_{REF} or I/O option only in the XCV1600E, 2000E; otherwise, I/O option only.
2. V_{REF} or I/O option only in the XCV2000E; otherwise, I/O option only.

FG860 Differential Pin Pairs

Virtex-E devices have differential pin pairs that can also provide other functions when not used as a differential pair. A √ in the AO column indicates that the pin pair can be used as an asynchronous output for all devices provided in this package. Pairs with a note number in the AO column are device dependent. They can have asynchronous outputs if the pin pair are in the same CLB row and column in the device. Numbers in this column refer to footnotes that indicate which devices have pin pairs than can be asynchronous outputs. The Other Functions column indicates alternative function(s) not available when the pair is used as a differential pair or differential clock.

Table 25: **FG860 Differential Pin Pair Summary XCV1000E, XCV1600E, XCV2000E**

Pair	Bank	P Pin	N Pin	AO	Other Functions
Global Differential Clock					
3	0	C22	A22	NA	IO_DLL_L34N
2	1	B22	D22	NA	IO_DLL_L34P
1	5	AY22	AW21	NA	IO_DLL_L176N
0	4	BA22	AW20	NA	IO_DLL_L176P
IO LVDS Total Pairs: 281, Asynchronous Output Pairs: 111					
0	0	D38	A38	2	-
1	0	E37	B37	1	-
2	0	C39	A37	1	VREF
3	0	C38	B36	1	-
4	0	B35	A36	√	-
5	0	D37	A35	√	VREF
6	0	A34	C37	5	-
7	0	B33	E36	5	-
8	0	C32	A33	√	-
9	0	B32	C36	√	VREF
10	0	D35	A32	1	-
11	0	C35	C31	1	VREF
12	0	A31	E34	√	-
13	0	C30	D34	√	VREF
14	0	E33	B30	2	-
15	0	D33	A30	2	-
16	0	B29	C33	√	VREF
17	0	A29	E32	√	-

Table 25: **FG860 Differential Pin Pair Summary XCV1000E, XCV1600E, XCV2000E**

Pair	Bank	P Pin	N Pin	AO	Other Functions
18	0	C28	D32	2	-
19	0	B28	E31	1	-
20	0	A28	D31	1	-
21	0	C27	D30	5	-
22	0	B27	E29	√	-
23	0	A27	D29	√	VREF
24	0	D28	C26	5	-
25	0	F27	B26	5	-
26	0	C25	E27	√	-
27	0	B25	D27	√	VREF
28	0	D26	A25	1	-
29	0	E25	A24	1	-
30	0	B24	D25	√	-
31	0	A23	E24	√	VREF
32	0	E23	C23	2	-
33	0	D23	B23	2	VREF
34	1	D22	A22	NA	IO_LVDS_DLL
35	1	B21	D21	2	VREF
36	1	A21	D20	2	-
37	1	D19	C20	√	VREF
38	1	E19	B20	√	-
39	1	A19	D18	1	-
40	1	C19	E18	1	-
41	1	E17	B19	√	VREF
42	1	D16	A18	√	-
43	1	B18	E16	5	-
44	1	A17	F16	5	-
45	1	E15	C17	√	VREF
46	1	D14	B17	√	-
47	1	E14	A16	5	-
48	1	D13	C16	1	-
49	1	D12	B16	1	-
50	1	E12	A15	2	-
51	1	C11	C15	√	-

Table 25: **FG860 Differential Pin Pair Summary XCV1000E, XCV1600E, XCV2000E**

Pair	Bank	P Pin	N Pin	AO	Other Functions
52	1	D11	B15	√	VREF
53	1	C14	E11	2	-
54	1	B14	C10	2	-
55	1	E10	A13	√	VREF
56	1	C9	C13	√	-
57	1	A12	D9	1	VREF
58	1	C12	E9	1	-
59	1	D8	B12	√	VREF
60	1	E8	A11	√	-
61	1	A10	C7	5	-
62	1	B10	C6	5	-
63	1	B9	A9	√	VREF
64	1	E7	A8	√	-
65	1	C5	B8	5	-
66	1	A6	A7	1	VREF
67	1	D6	B7	1	-
68	1	C4	A5	2	-
69	1	E6	B6	√	CS
70	2	F5	D2	√	DIN, D0
71	2	E4	E2	3	-
72	2	D3	F2	1	-
73	2	E1	F4	2	VREF
74	2	G2	E3	4	-
75	2	F1	G5	2	-
76	2	G1	F3	1	VREF
77	2	G4	H1	√	-
78	2	J2	G3	2	-
79	2	H5	K2	1	-
80	2	H4	K1	√	VREF
81	2	L2	L3	√	-
82	2	L1	J5	5	VREF
83	2	J4	M3	2	-
84	2	J3	M1	√	VREF
85	2	N2	K4	√	-

Table 25: **FG860 Differential Pin Pair Summary XCV1000E, XCV1600E, XCV2000E**

Pair	Bank	P Pin	N Pin	AO	Other Functions
86	2	N3	K3	2	-
87	2	L5	P2	√	D1
88	2	P3	L4	√	D2
89	2	P1	R2	3	-
90	2	M5	R3	1	-
91	2	M4	R1	2	-
92	2	N4	T2	4	-
93	2	P5	T3	2	-
94	2	P4	T1	1	VREF
95	2	U2	R4	√	-
96	2	U3	T5	2	-
97	2	T4	V2	1	-
98	2	U5	V3	√	D3
99	2	V1	V5	√	-
100	2	W2	V4	5	-
101	2	W5	W1	2	-
102	2	Y2	W4	√	VREF
103	2	Y1	Y5	√	-
104	2	AA1	Y4	2	VREF
105	2	AA4	AA2	√	-
106	3	AB3	AC4	2	VREF
107	3	AB1	AC5	√	-
108	3	AD4	AC3	√	VREF
109	3	AC1	AD5	2	-
110	3	AE4	AD3	5	-
111	3	AE5	AD2	√	-
112	3	AE1	AF5	√	VREF
113	3	AE2	AG4	1	-
114	3	AG5	AF1	2	-
115	3	AH4	AF2	√	-
116	3	AF3	AJ4	1	VREF
117	3	AG1	AJ5	2	-
118	3	AG2	AK4	4	-
119	3	AG3	AL4	2	-

Table 25: **FG860 Differential Pin Pair Summary XCV1000E, XCV1600E, XCV2000E**

Pair	Bank	P Pin	N Pin	AO	Other Functions
120	3	AH1	AL5	1	-
121	3	AH2	AM4	3	-
122	3	AH3	AM5	√	D5
123	3	AJ1	AN3	√	VREF
124	3	AN4	AJ3	2	-
125	3	AN5	AK1	√	-
126	3	AK2	AP4	√	VREF
127	3	AK3	AP5	2	-
128	3	AR3	AL2	5	VREF
129	3	AR4	AL3	√	-
130	3	AM1	AT3	√	VREF
131	3	AM2	AT4	1	-
132	3	AT5	AN1	2	-
133	3	AU3	AN2	√	-
134	3	AP1	AP2	1	VREF
135	3	AR1	AV3	2	-
136	3	AR2	AT1	4	-
137	3	AV4	AT2	2	VREF
138	3	AU1	AU5	1	-
139	3	AU2	AW3	3	-
140	3	AV1	AW5	√	INIT
141	4	AV6	BA4	√	-
142	4	AY4	BA5	2	-
143	4	AW6	BB5	1	-
144	4	BA6	AY5	1	VREF
145	4	BB6	AY6	5	-
146	4	BA7	AV7	√	-
147	4	BB7	AW7	√	VREF
148	4	AY7	BB8	5	-
149	4	BA9	AV8	5	-
150	4	AW8	BA10	√	-
151	4	BB10	AY8	√	VREF
152	4	AV9	BA11	1	-
153	4	BB11	AW9	1	VREF

Table 25: **FG860 Differential Pin Pair Summary XCV1000E, XCV1600E, XCV2000E**

Pair	Bank	P Pin	N Pin	AO	Other Functions
154	4	AY9	BA12	√	-
155	4	BB12	AV10	√	VREF
156	4	BA13	AW10	2	-
157	4	BB13	AY10	2	-
158	4	AV11	BA14	√	VREF
159	4	AW11	BB14	√	-
160	4	AV12	BA15	2	-
161	4	AW12	AY15	1	-
162	4	AW13	BB15	1	-
163	4	AV14	BA16	5	-
164	4	AW14	AY16	√	-
165	4	BB16	AV15	√	VREF
166	4	AY17	AW15	5	-
167	4	BB17	AU16	5	-
168	4	AV16	AY18	√	-
169	4	AW16	BA18	√	VREF
170	4	BB19	AW17	1	-
171	4	AY19	AV18	1	-
172	4	AW18	BB20	√	-
173	4	AY20	AV19	√	VREF
174	4	BB21	AW19	2	-
175	4	AY21	AV20	2	VREF
176	5	AW20	AW21	NA	IO_LVDS_DLL
177	5	BB22	AW22	2	VREF
178	5	BB23	AW23	2	-
179	5	AV23	BA23	√	VREF
180	5	AW24	BB24	√	-
181	5	AY24	AW25	1	-
182	5	BA24	AV25	1	-
183	5	AW26	AY25	√	VREF
184	5	AV26	BA25	√	-
185	5	BB26	AV27	5	-
186	5	AY26	AU27	5	-
187	5	AW28	BB27	√	VREF

Table 25: **FG860 Differential Pin Pair Summary XCV1000E, XCV1600E, XCV2000E**

Pair	Bank	P Pin	N Pin	AO	Other Functions
188	5	AY27	AV28	√	-
189	5	BA27	AW29	5	-
190	5	BB28	AV29	1	-
191	5	AY28	AW30	1	-
192	5	BA28	AW31	2	-
193	5	BB29	AV31	√	-
194	5	AY29	AY32	√	VREF
195	5	AW32	BB30	2	-
196	5	AV32	AY30	2	-
197	5	BA30	AW33	√	VREF
198	5	BB31	AV33	√	-
199	5	AY34	BA31	1	VREF
200	5	AW34	BB32	1	-
201	5	BA32	AY35	√	VREF
202	5	BB33	AW35	√	-
203	5	AV35	BB34	5	-
204	5	AY36	BA34	5	-
205	5	BB35	AV36	√	VREF
206	5	BA35	AY37	√	-
207	5	BB36	BA36	5	-
208	5	AW37	BB37	1	VREF
209	5	BA37	AY38	1	-
210	5	BB38	AY39	2	-
211	6	AV42	AV41	√	-
212	6	AU41	AW40	3	-
213	6	AU42	AV39	1	-
214	6	AU38	AT41	2	VREF
215	6	AV40	AT42	4	-
216	6	AU39	AR41	2	-
217	6	AU40	AR42	1	VREF
218	6	AP42	AT38	√	-
219	6	AT39	AN41	2	-
220	6	AM40	AT40	1	-
221	6	AM41	AR38	√	VREF

Table 25: **FG860 Differential Pin Pair Summary XCV1000E, XCV1600E, XCV2000E**

Pair	Bank	P Pin	N Pin	AO	Other Functions
222	6	AR40	AM42	√	-
223	6	AP38	AL40	5	VREF
224	6	AL42	AP39	2	-
225	6	AK40	AP40	√	VREF
226	6	AN39	AK41	√	-
227	6	AN40	AK42	2	-
228	6	AJ41	AM38	√	VREF
229	6	AM39	AJ42	√	-
230	6	AH41	AH40	3	-
231	6	AH42	AL38	1	-
232	6	AG41	AL39	2	-
233	6	AG40	AK39	4	-
234	6	AG42	AJ38	2	-
235	6	AJ39	AF42	1	VREF
236	6	AH38	AF41	√	-
237	6	AH39	AE42	2	-
238	6	AE41	AG38	1	-
239	6	AD42	AG39	√	VREF
240	6	AF39	AD40	√	-
241	6	AE38	AD41	5	-
242	6	AC40	AE39	2	-
243	6	AC41	AD38	√	VREF
244	6	AC38	AB42	√	-
245	6	AC39	AB40	2	VREF
246	7	AB39	AA41	√	-
247	7	AA39	Y41	2	VREF
248	7	Y39	Y40	√	-
249	7	W41	Y38	√	VREF
250	7	W39	W40	2	-
251	7	V41	W38	5	-
252	7	V40	V39	√	-
253	7	U39	V42	√	VREF
254	7	U38	U41	1	-
255	7	T39	U42	2	-

Table 25: **FG860 Differential Pin Pair Summary XCV1000E, XCV1600E, XCV2000E**

Pair	Bank	P Pin	N Pin	AO	Other Functions
256	7	T38	T41	√	-
257	7	T42	R39	1	VREF
258	7	R38	R42	2	-
259	7	P39	R40	4	-
260	7	P38	R41	2	-
261	7	N39	P42	1	-
262	7	M39	P40	3	-
263	7	M38	P41	√	-
264	7	L39	N42	√	VREF
265	7	N41	L38	2	-
266	7	M42	K40	√	-
267	7	K38	M40	√	VREF
268	7	J40	M41	2	-
269	7	L40	J39	5	VREF
270	7	L41	J38	√	-
271	7	H39	K42	√	VREF
272	7	H38	K41	1	-
273	7	G40	J41	2	-
274	7	G39	H42	√	-
275	7	G42	G38	1	VREF
276	7	F40	G41	2	-
277	7	F41	F42	4	-
278	7	E42	F39	2	VREF
279	7	E41	E40	1	-
280	7	D41	E39	3	-

Notes:
1. AO in the XCV1000E, 2000E.
2. AO in the XCV1000E, 1600E.
3. AO in the XCV2000E.
4. AO in the XCV1600E.
5. AO in the XCV1000E.

FG900 Fine-Pitch Ball Grid Array Package

XCV600E, XCV1000E, and XCV1600E devices in the FG900 fine-pitch Ball Grid Array package have footprint compatibility. Pins labeled I0_VREF can be used as either in all parts unless device-dependent as indicated in the footnotes. If the pin is not used as V_{REF}, it can be used as general I/O. Immediately following Table 26, see Table 27 for Differential Pair information.

Table 26: **FG900 — XCV600E, XCV1000E, XCV1600E**

Bank	Pin Description	Pin #
0	GCK3	C15
0	IO	A7[4]
0	IO	A13[4]
0	IO	C5[4]
0	IO	C6[4]
0	IO	C14[4]
0	IO	D8[5]
0	IO	D10
0	IO	D13[4]
0	IO	E6
0	IO	E9[5]
0	IO	E14[5]
0	IO	F9[4]
0	IO	F14[5]
0	IO	G15
0	IO	K11[5]
0	IO	K12
0	IO	L13[4]
0	IO_L0N_YY	C4[4]
0	IO_L0P_YY	F7[3]
0	IO_L1N_Y	D5
0	IO_L1P_Y	G8
0	IO_VREF_L2N_Y	A3[1]
0	IO_L2P_Y	H9
0	IO_L3N_Y	B4[4]
0	IO_L3P_Y	J10[4]
0	IO_L4N_YY	A4
0	IO_L4P_YY	D6
0	IO_VREF_L5N_YY	E7
0	IO_L5P_YY	B5

Table 26: **FG900 — XCV600E, XCV1000E, XCV1600E**

Bank	Pin Description	Pin #
0	IO_L6N_Y	A5
0	IO_L6P_Y	F8
0	IO_L7N_Y	D7
0	IO_L7P_Y	N11
0	IO_L8N_YY	G9
0	IO_L8P_YY	E8
0	IO_VREF_L9N_YY	A6
0	IO_L9P_YY	J11
0	IO_L10N_Y	C7
0	IO_L10P_Y	B7
0	IO_L11N_Y	C8
0	IO_L11P_Y	H10
0	IO_L12N_YY	G10
0	IO_L12P_YY	F10
0	IO_VREF_L13N_YY	A8
0	IO_L13P_YY	H11
0	IO_L14N	D9[4]
0	IO_L14P	C9[3]
0	IO_L15N_YY	B9
0	IO_L15P_YY	J12
0	IO_L16N	E10[4]
0	IO_VREF_L16P	A9
0	IO_L17N	G11
0	IO_L17P	B10
0	IO_L18N_YY	H12[4]
0	IO_L18P_YY	C10[4]
0	IO_L19N_Y	H13
0	IO_L19P_Y	F11
0	IO_L20N_Y	E11
0	IO_L20P_Y	D11
0	IO_L21N_Y	B11[4]
0	IO_L21P_Y	G12[4]
0	IO_L22N_YY	F12
0	IO_L22P_YY	C11
0	IO_VREF_L23N_YY	A10[1]
0	IO_L23P_YY	D12
0	IO_L24N_Y	E12

Table 26: **FG900 — XCV600E, XCV1000E, XCV1600E**

Bank	Pin Description	Pin #
0	IO_L24P_Y	A11
0	IO_L25N_Y	G13
0	IO_L25P_Y	B12
0	IO_L26N_YY	A12
0	IO_L26P_YY	K13
0	IO_VREF_L27N_YY	F13
0	IO_L27P_YY	B13
0	IO_L28N_Y	G14
0	IO_L28P_Y	E13
0	IO_L29N_Y	D14
0	IO_L29P_Y	B14
0	IO_L30N_YY	A14
0	IO_L30P_YY	J14
0	IO_VREF_L31N_YY	K14
0	IO_L31P_YY	J15
0	IO_L32N	B15[4]
0	IO_L32P	H15[3]
0	IO_VREF_L33N_YY	F15[2,3]
0	IO_L33P_YY	D15[4]
0	IO_LVDS_DLL_L34N	A15
1	GCK2	E15
1	IO	A25[4]
1	IO	B17[4]
1	IO	B18[4]
1	IO	C23[4]
1	IO	D16[4]
1	IO	D17[5]
1	IO	D23[4]
1	IO	E19[4]
1	IO	E24[5]
1	IO	F22[4]
1	IO	G17[5]
1	IO	G20[4]
1	IO	J16[4]
1	IO	J17[4]
1	IO	J19[5]

Table 26: **FG900 — XCV600E, XCV1000E, XCV1600E**

Bank	Pin Description	Pin #
1	IO	J20[5]
1	IO	L18[4]
1	IO_LVDS_DLL_L34P	E16
1	IO_L35N_YY	B16
1	IO_VREF_L35P_YY	F16[2]
1	IO_L36N_YY	A16
1	IO_L36P_YY	H16
1	IO_L37N_YY	C16
1	IO_VREF_L37P_YY	K15
1	IO_L38N_YY	K16
1	IO_L38P_YY	G16
1	IO_L39N_Y	A17
1	IO_L39P_Y	E17
1	IO_L40N_Y	F17
1	IO_L40P_Y	C17
1	IO_L41N_YY	E18
1	IO_VREF_L41P_YY	A18
1	IO_L42N_YY	D18
1	IO_L42P_YY	A19
1	IO_L43N_Y	B19
1	IO_L43P_Y	G18
1	IO_L44N_Y	D19
1	IO_L44P_Y	H18
1	IO_L45N_YY	F18
1	IO_VREF_L45P_YY	F19[1]
1	IO_L46N_YY	B20
1	IO_L46P_YY	K17
1	IO_L47N_Y	D20[4]
1	IO_L47P_Y	A20[4]
1	IO_L48N_Y	G19
1	IO_L48P_Y	C20
1	IO_L49N_Y	K18
1	IO_L49P_Y	E20
1	IO_L50N_YY	B21[4]
1	IO_L50P_YY	D21[4]
1	IO_L51N_YY	F20
1	IO_L51P_YY	A21

Table 26: **FG900 — XCV600E, XCV1000E, XCV1600E**

Bank	Pin Description	Pin #
1	IO_L52N_YY	C21
1	IO_VREF_L52P_YY	A22
1	IO_L53N_YY	H19
1	IO_L53P_YY	B22
1	IO_L54N_YY	E21
1	IO_L54P_YY	D22
1	IO_L55N_YY	F21
1	IO_VREF_L55P_YY	C22
1	IO_L56N_YY	H20
1	IO_L56P_YY	E22
1	IO_L57N_Y	G21
1	IO_L57P_Y	A23
1	IO_L58N_Y	A24
1	IO_L58P_Y	K19
1	IO_L59N_YY	C24
1	IO_VREF_L59P_YY	B24
1	IO_L60N_YY	H21
1	IO_L60P_YY	G22
1	IO_L61N_Y	E23
1	IO_L61P_Y	C25
1	IO_L62N_Y	D24
1	IO_L62P_Y	A26
1	IO_L63N_YY	B26
1	IO_VREF_L63P_YY	K20
1	IO_L64N_YY	D25
1	IO_L64P_YY	J21
1	IO_L65N_Y	C26[4]
1	IO_L65P_Y	F23[4]
1	IO_L66N_Y	B27
1	IO_VREF_L66P_Y	G23[1]
1	IO_L67N_Y	A27
1	IO_L67P_Y	F24
1	IO_L68N_YY	B28[3]
1	IO_L68P_YY	A28[4]
1	IO_WRITE_L69N_YY	K21
1	IO_CS_L69P_YY	C27

Table 26: **FG900 — XCV600E, XCV1000E, XCV1600E**

Bank	Pin Description	Pin #
2	IO	D29[5]
2	IO	G26[4]
2	IO	H24[4]
2	IO	H25[4]
2	IO	H28[5]
2	IO	J25[4]
2	IO	J27[5]
2	IO	K30[4]
2	IO	M24[4]
2	IO	M25[4]
2	IO	N20
2	IO	N23[4]
2	IO	P26[5]
2	IO	P27[5]
2	IO	P30[4]
2	IO	R30
2	IO_DOUT_BUSY_L70P_YY	J22
2	IO_DIN_D0_L70N_YY	E27
2	IO_L71P	C29[4]
2	IO_L71N	D28[3]
2	IO_L72P_Y	G25
2	IO_L72N_Y	E25
2	IO_VREF_L73P_YY	E28[1]
2	IO_L73N_YY	C30
2	IO_L74P_Y	K22[4]
2	IO_L74N_Y	F27[3]
2	IO_L75P_YY	D30
2	IO_L75N_YY	J23
2	IO_VREF_L76P_Y	L21
2	IO_L76N_Y	F28
2	IO_L77P_YY	G28
2	IO_L77N_YY	E30
2	IO_L78P_YY	G27
2	IO_L78N_YY	E29
2	IO_L79P	K23
2	IO_L79N	H26
2	IO_VREF_L80P_YY	F30

Table 26: **FG900 — XCV600E, XCV1000E, XCV1600E**

Bank	Pin Description	Pin #
2	IO_L80N_YY	L22
2	IO_L81P_YY	H27
2	IO_L81N_YY	G29
2	IO_L82P	G30
2	IO_L82N	M21
2	IO_L83P_YY	J24
2	IO_L83N_YY	J26
2	IO_VREF_L84P_YY	H30
2	IO_L84N_YY	L23
2	IO_L85P_YY	K26[4]
2	IO_L85N_YY	J28[3]
2	IO_L86P_YY	J29
2	IO_L86N_YY	K24
2	IO_L87P_YY	K27[4]
2	IO_VREF_L87N_YY	J30
2	IO_D1_L88P	M22
2	IO_D2_L88N	K29
2	IO_L89P_YY	K28[3]
2	IO_L89N_YY	L25[4]
2	IO_L90P	N21
2	IO_L90N	K25
2	IO_L91P_YY	L24
2	IO_L91N_YY	L27
2	IO_L92P_Y	L29[4]
2	IO_L92N_Y	M23[4]
2	IO_L93P_YY	L26
2	IO_L93N_YY	L28
2	IO_VREF_L94P	L30[1]
2	IO_L94N	M27
2	IO_L95P_YY	M26
2	IO_L95N_YY	M29
2	IO_L96P_YY	N29
2	IO_L96N_YY	M30
2	IO_L97P	N25
2	IO_L97N	N27
2	IO_VREF_L98P_YY	N30
2	IO_D3_L98N_YY	P21

Table 26: **FG900 — XCV600E, XCV1000E, XCV1600E**

Bank	Pin Description	Pin #
2	IO_L99P_YY	N26
2	IO_L99N_YY	P28
2	IO_L100P	P29
2	IO_L100N	N24
2	IO_L101P_YY	P22
2	IO_L101N_YY	R26
2	IO_VREF_L102P_YY	P25
2	IO_L102N_YY	R29
2	IO_L103P_YY	R21[4]
2	IO_L103N_YY	R28[3]
2	IO_VREF_L104P_YY	R25[2]
2	IO_L104N_YY	T30
2	IO_L105P_YY	P24[4]
2	IO_L105N_YY	R27[3]
2	IO_L106P	R24
3	IO	T22[4]
3	IO	T24[4]
3	IO	T26[4]
3	IO	T29[4]
3	IO	U26[5]
3	IO	V23[4]
3	IO	V25[4]
3	IO	V30[5]
3	IO	Y21[4]
3	IO	AA26[4]
3	IO	AA23[4]
3	IO	AB27[4]
3	IO	AB29[4]
3	IO	AC28[5]
3	IO	AD26[4]
3	IO	AD29[5]
3	IO	AE27[5]
3	IO_L106N	U29
3	IO_L107P_YY	R22
3	IO_VREF_L107N_YY	T27[2]
3	IO_L108P_YY	R23

Table 26: **FG900 — XCV600E, XCV1000E, XCV1600E**

Bank	Pin Description	Pin #
3	IO_L108N_YY	T28
3	IO_L109P_YY	T21
3	IO_VREF_L109N_YY	T25
3	IO_L110P_YY	U28
3	IO_L110N_YY	U30
3	IO_L111P	T23
3	IO_L111N	U27
3	IO_L112P_YY	U25
3	IO_L112N_YY	V27
3	IO_D4_L113P_YY	U24
3	IO_VREF_L113N_YY	V29
3	IO_L114P	W30
3	IO_L114N	U22
3	IO_L115P_YY	U21
3	IO_L115N_YY	W29
3	IO_L116P_YY	V26
3	IO_L116N_YY	W27
3	IO_L117P	W26
3	IO_VREF_L117N	Y29[1]
3	IO_L118P_YY	W25
3	IO_L118N_YY	Y30
3	IO_L119P_Y	V24[4]
3	IO_L119N_Y	Y28[4]
3	IO_L120P_YY	AA30
3	IO_L120N_YY	W24
3	IO_L121P	AA29
3	IO_L121N	V20
3	IO_L122P	Y27[4]
3	IO_L122N	W23[4]
3	IO_L123P_YY	Y26
3	IO_D5_L123N_YY	AB30
3	IO_D6_L124P_YY	V21
3	IO_VREF_L124N_YY	AA28
3	IO_L125P_YY	Y25
3	IO_L125N_YY	AA27
3	IO_L126P_YY	W22
3	IO_L126N_YY	Y23

Table 26: **FG900 — XCV600E, XCV1000E, XCV1600E**

Bank	Pin Description	Pin #
3	IO_L127P_YY	Y24
3	IO_VREF_L127N_YY	AB28
3	IO_L128P_YY	AC30
3	IO_L128N_YY	AA25
3	IO_L129P	W21
3	IO_L129N	AA24
3	IO_L130P_YY	AB26
3	IO_L130N_YY	AD30
3	IO_L131P_YY	Y22
3	IO_VREF_L131N_YY	AC27
3	IO_L132P	AD28
3	IO_L132N	AB25
3	IO_L133P_YY	AC26
3	IO_L133N_YY	AE30
3	IO_L134P_YY	AD27
3	IO_L134N_YY	AF30
3	IO_L135P	AF29
3	IO_VREF_L135N	AB24
3	IO_L136P_YY	AB23
3	IO_L136N_YY	AE28
3	IO_L137P_Y	AG30[3]
3	IO_L137N_Y	AC25[4]
3	IO_L138P_YY	AE26
3	IO_VREF_L138N_YY	AG29[1]
3	IO_L139P	AH30
3	IO_L139N	AC24
3	IO_L140P	AF28[3]
3	IO_L140N	AD25[4]
3	IO_D7_L141P_YY	AH29
3	IO_INIT_L141N_YY	AA22
4	GCK0	AJ16
4	IO	AB19[4]
4	IO	AC16[4]
4	IO	AC19
4	IO	AD18[4]
4	IO	AD21[4]

Table 26: **FG900 — XCV600E, XCV1000E, XCV1600E**

Bank	Pin Description	Pin #
4	IO	AE15[4]
4	IO	AE18[4]
4	IO	AE21
4	IO	AE24[5]
4	IO	AF17[5]
4	IO	AF18[5]
4	IO	AJ18[4]
4	IO	AK18
4	IO	AK25[5]
4	IO	AK27[4]
4	IO	AH23[4]
4	IO	AH24[5]
4	IO_L142P_YY	AF27
4	IO_L142N_YY	AK28
4	IO_L143P_YY	AG26[4]
4	IO_L143N_YY	AH27[3]
4	IO_L144P	AD23
4	IO_L144N	AJ27
4	IO_VREF_L145P	AB21[1]
4	IO_L145N	AF25
4	IO_L146P	AC22[4]
4	IO_L146N	AH26[4]
4	IO_L147P_YY	AA21
4	IO_L147N_YY	AG25
4	IO_VREF_L148P_YY	AJ26
4	IO_L148N_YY	AD22
4	IO_L149P	AA20
4	IO_L149N	AH25
4	IO_L150P	AC21
4	IO_L150N	AF24
4	IO_L151P_YY	AG24
4	IO_L151N_YY	AK26
4	IO_VREF_L152P_YY	AJ24
4	IO_L152N_YY	AF23
4	IO_L153P	AE23
4	IO_L153N	AB20
4	IO_L154P	AC20

Table 26: **FG900 — XCV600E, XCV1000E, XCV1600E**

Bank	Pin Description	Pin #
4	IO_L154N	AG23
4	IO_L155P_YY	AF22
4	IO_L155N_YY	AE22
4	IO_VREF_L156P_YY	AJ22
4	IO_L156N_YY	AG22
4	IO_L157P	AK24[4]
4	IO_L157N	AD20[3]
4	IO_L158P_YY	AA19
4	IO_L158N_YY	AF21
4	IO_L159P	AH22[4]
4	IO_VREF_L159N	AA18
4	IO_L160P	AG21
4	IO_L160N	AK23
4	IO_L161P_YY	AH21[4]
4	IO_L161N_YY	AD19[4]
4	IO_L162P	AE20
4	IO_L162N	AJ21
4	IO_L163P	AG20
4	IO_L163N	AF20
4	IO_L164P	AC18[4]
4	IO_L164N	AF19[4]
4	IO_L165P_YY	AJ20
4	IO_L165N_YY	AE19
4	IO_VREF_L166P_YY	AK22[1]
4	IO_L166N_YY	AH20
4	IO_L167P	AG19
4	IO_L167N	AB17
4	IO_L168P	AJ19
4	IO_L168N	AD17
4	IO_L169P_YY	AA16
4	IO_L169N_YY	AA17
4	IO_VREF_L170P_YY	AK21
4	IO_L170N_YY	AB16
4	IO_L171P	AG18
4	IO_L171N	AK20
4	IO_L172P	AK19
4	IO_L172N	AD16

Table 26: **FG900 — XCV600E, XCV1000E, XCV1600E**

Bank	Pin Description	Pin #
4	IO_L173P_YY	AE16
4	IO_L173N_YY	AE17
4	IO_VREF_L174P_YY	AG17
4	IO_L174N_YY	AJ17
4	IO_L175P	AD15[4]
4	IO_L175N	AH17[3]
4	IO_VREF_L176P_YY	AG16[2]
4	IO_L176N_YY	AK17
4	IO_LVDS_DLL_L177P	AF16
5	GCK1	AK16
5	IO	AA11[4]
5	IO	AA14[4]
5	IO	AD14[4]
5	IO	AE7[5]
5	IO	AE8[5]
5	IO	AE10[4]
5	IO	AF6[4]
5	IO	AF10[4]
5	IO	AG9[4]
5	IO	AG12[4]
5	IO	AG14[5]
5	IO	AH8[4]
5	IO	AK6[5]
5	IO	AK14[5]
5	IO	AJ13[4]
5	IO	AJ15[4]
5	IO_LVDS_DLL_L177N	AH16
5	IO_L178P_YY	AC15[4]
5	IO_VREF_L178N_YY	AG15[2,3]
5	IO_L179P_YY	AB15
5	IO_L179N_YY	AF15
5	IO_L180P_YY	AA15
5	IO_VREF_L180N_YY	AF14
5	IO_L181P_YY	AH15
5	IO_L181N_YY	AK15
5	IO_L182P	AB14

Table 26: **FG900 — XCV600E, XCV1000E, XCV1600E**

Bank	Pin Description	Pin #
5	IO_L182N	AF13
5	IO_L183P	AH14
5	IO_L183N	AJ14
5	IO_L184P_YY	AE14
5	IO_VREF_L184N_YY	AG13
5	IO_L185P_YY	AK13
5	IO_L185N_YY	AD13
5	IO_L186P	AE13
5	IO_L186N	AF12
5	IO_L187P	AC13
5	IO_L187N	AA13
5	IO_L188P_YY	AA12
5	IO_VREF_L188N_YY	AJ12[1]
5	IO_L189P_YY	AB12
5	IO_L189N_YY	AE11
5	IO_L190P	AK12[4]
5	IO_L190N	Y13[4]
5	IO_L191P	AG11
5	IO_L191N	AF11
5	IO_L192P	AH11
5	IO_L192N	AJ11
5	IO_L193P_YY	AE12[4]
5	IO_L193N_YY	AG10[4]
5	IO_L194P_YY	AD12
5	IO_L194N_YY	AK11
5	IO_L195P_YY	AJ10
5	IO_VREF_L195N_YY	AC12
5	IO_L196P_YY	AK10
5	IO_L196N_YY	AD11
5	IO_L197P_YY	AJ9
5	IO_L197N_YY	AE9
5	IO_L198P_YY	AH10
5	IO_VREF_L198N_YY	AF9
5	IO_L199P_YY	AH9
5	IO_L199N_YY	AK9
5	IO_L200P	AF8
5	IO_L200N	AB11

Table 26: **FG900 — XCV600E, XCV1000E, XCV1600E**

Bank	Pin Description	Pin #
5	IO_L201P	AC11
5	IO_L201N	AG8
5	IO_L202P_YY	AK8
5	IO_VREF_L202N_YY	AF7
5	IO_L203P_YY	AG7
5	IO_L203N_YY	AK7
5	IO_L204P	AJ7
5	IO_L204N	AD10
5	IO_L205P	AH6
5	IO_L205N	AC10
5	IO_L206P_YY	AD9
5	IO_VREF_L206N_YY	AG6
5	IO_L207P_YY	AB10
5	IO_L207N_YY	AJ5
5	IO_L208P	AD8[4]
5	IO_L208N	AK5[4]
5	IO_L209P	AC9
5	IO_VREF_L209N	AJ4[1]
5	IO_L210P	AG5
5	IO_L210N	AK4
5	IO_L211P_YY	AH5[3]
5	IO_L211N_YY	AG3[4]
6	IO	T2[4]
6	IO	T10[4]
6	IO	U1
6	IO	U4[5]
6	IO	U6[4]
6	IO	U7[4]
6	IO	V1[4]
6	IO	V5[5]
6	IO	V8
6	IO	Y10[4]
6	IO	AA4[4]
6	IO	AB5[5]
6	IO	AB7[4]
6	IO	AC3[5]

Table 26: **FG900 — XCV600E, XCV1000E, XCV1600E**

Bank	Pin Description	Pin #
6	IO	AC5[4]
6	IO	AD1[4]
6	IO	AE5[5]
6	IO_L212N_YY	AF3
6	IO_L212P_YY	AC6
6	IO_L213N	AH2[4]
6	IO_L213P	AG2[3]
6	IO_L214N	AB9
6	IO_L214P	AE4
6	IO_VREF_L215N_YY	AE3[1]
6	IO_L215P_YY	AH1
6	IO_L216N_Y	AB8[4]
6	IO_L216P_Y	AD6[3]
6	IO_L217N_YY	AG1
6	IO_L217P_YY	AA10
6	IO_VREF_L218N	AA9
6	IO_L218P	AD4
6	IO_L219N_YY	AD5
6	IO_L219P_YY	AD2
6	IO_L220N_YY	AD3
6	IO_L220P_YY	AF2
6	IO_L221N	AA8
6	IO_L221P	AA7
6	IO_VREF_L222N_YY	AF1
6	IO_L222P_YY	Y9
6	IO_L223N_YY	AB6
6	IO_L223P_YY	AC4
6	IO_L224N	AE1
6	IO_L224P	W8
6	IO_L225N_YY	Y8
6	IO_L225P_YY	AB4
6	IO_VREF_L226N_YY	AB3
6	IO_L226P_YY	W9
6	IO_L227N_YY	AA5[4]
6	IO_L227P_YY	W10[3]
6	IO_L228N_YY	AB1
6	IO_L228P_YY	V10

Table 26: **FG900 — XCV600E, XCV1000E, XCV1600E**

Bank	Pin Description	Pin #
6	IO_L229N_YY	Y7[4]
6	IO_VREF_L229P_YY	AC1
6	IO_L230N	V11
6	IO_L230P	AA3
6	IO_L231N_YY	AA2[3]
6	IO_L231P_YY	U10[4]
6	IO_L232N	W7
6	IO_L232P	AA6
6	IO_L233N_YY	Y6
6	IO_L233P_YY	Y4
6	IO_L234N_Y	AA1[4]
6	IO_L234P_Y	V7[4]
6	IO_L235N_YY	Y3
6	IO_L235P_YY	Y2
6	IO_VREF_L236N	Y5[1]
6	IO_L236P	W5
6	IO_L237N_YY	W4
6	IO_L237P_YY	W6
6	IO_L238N_YY	V6
6	IO_L238P_YY	W2
6	IO_L239N	U9
6	IO_L239P	V4
6	IO_VREF_L240N_YY	AB2
6	IO_L240P_YY	T8
6	IO_L241N_YY	U5
6	IO_L241P_YY	W1
6	IO_L242N	Y1
6	IO_L242P	T9
6	IO_L243N_YY	T7
6	IO_L243P_YY	U3
6	IO_VREF_L244N_YY	T5
6	IO_L244P_YY	V2
6	IO_L245N_YY	R9[4]
6	IO_L245P_YY	T6[3]
6	IO_VREF_L246N_YY	T4[2]
6	IO_L246P_YY	U2
6	IO_L247N	T1

Table 26: **FG900 — XCV600E, XCV1000E, XCV1600E**

Bank	Pin Description	Pin #
7	IO	E3
7	IO	F1[4]
7	IO	G1[5]
7	IO	G4[5]
7	IO	H3[5]
7	IO	J1[4]
7	IO	J3[4]
7	IO	J4[4]
7	IO	J6[4]
7	IO	L10[4]
7	IO	N2[4]
7	IO	N8[4]
7	IO	N10[4]
7	IO	P3[5]
7	IO	P9[4]
7	IO	R1[5]
7	IO	T3[4]
7	IO_L247P	R10
7	IO_L248N_YY	R5[3]
7	IO_L248P_YY	R6[4]
7	IO_L249N_YY	R8
7	IO_VREF_L249P_YY	R4[2]
7	IO_L250N_YY	R7
7	IO_L250P_YY	R3
7	IO_L251N_YY	P10
7	IO_VREF_L251P_YY	P6
7	IO_L252N_YY	P5
7	IO_L252P_YY	P2
7	IO_L253N	P7
7	IO_L253P	P4
7	IO_L254N_YY	N4
7	IO_L254P_YY	R2
7	IO_L255N_YY	N7
7	IO_VREF_L255P_YY	P1
7	IO_L256N	M6

Table 26: **FG900 — XCV600E, XCV1000E, XCV1600E**

Bank	Pin Description	Pin #
7	IO_L256P	N6
7	IO_L257N_YY	N5
7	IO_L257P_YY	N1
7	IO_L258N_YY	M4
7	IO_L258P_YY	M5
7	IO_L259N	M2
7	IO_VREF_L259P	M1[1]
7	IO_L260N_YY	L4
7	IO_L260P_YY	L2
7	IO_L261N_Y	M7[4]
7	IO_L261P_Y	L5[4]
7	IO_L262N_YY	L1
7	IO_L262P_YY	M8
7	IO_L263N	K2
7	IO_L263P	M9
7	IO_L264N	L3[4]
7	IO_L264P	M10[4]
7	IO_L265N_YY	K5
7	IO_L265P_YY	K1
7	IO_L266N_YY	L6
7	IO_VREF_L266P_YY	K3
7	IO_L267N_YY	L7
7	IO_L267P_YY	K4
7	IO_L268N_YY	L8
7	IO_L268P_YY	J5
7	IO_L269N_YY	K6
7	IO_VREF_L269P_YY	H4
7	IO_L270N_YY	H1
7	IO_L270P_YY	K7
7	IO_L271N	J7
7	IO_L271P	J2
7	IO_L272N_YY	H5
7	IO_L272P_YY	G2
7	IO_L273N_YY	L9
7	IO_VREF_L273P_YY	G5
7	IO_L274N	F3
7	IO_L274P	K8

Table 26: **FG900 — XCV600E, XCV1000E, XCV1600E**

Bank	Pin Description	Pin #
7	IO_L275N_YY	G3
7	IO_L275P_YY	E1
7	IO_L276N_YY	H6
7	IO_L276P_YY	E2
7	IO_L277N	E4
7	IO_VREF_L277P	K9
7	IO_L278N_YY	J8
7	IO_L278P_YY	F4
7	IO_L279N_Y	D1[3]
7	IO_L279P_Y	H7[4]
7	IO_L280N_YY	G6
7	IO_VREF_L280P_YY	C2[1]
7	IO_L281N	D2
7	IO_L281P	F5
7	IO_L282N_YY	D3[4]
7	IO_L282P_YY	K10[3]
2	CCLK	F26
3	DONE	AJ28
NA	DXN	AJ3
NA	DXP	AH4
NA	M0	AF4
NA	M1	AC7
NA	M2	AK3
NA	PROGRAM	AG28
NA	TCK	B3
NA	TDI	H22
2	TDO	D26
NA	TMS	C1
NA	VCCINT	L11
NA	VCCINT	L12
NA	VCCINT	L19
NA	VCCINT	L20
NA	VCCINT	M11
NA	VCCINT	M12
NA	VCCINT	M19

Table 26: **FG900 — XCV600E, XCV1000E, XCV1600E**

Bank	Pin Description	Pin #
NA	VCCINT	M20
NA	VCCINT	N13
NA	VCCINT	N14
NA	VCCINT	N15
NA	VCCINT	N16
NA	VCCINT	N17
NA	VCCINT	N18
NA	VCCINT	P13
NA	VCCINT	P18
NA	VCCINT	R13
NA	VCCINT	R18
NA	VCCINT	T13
NA	VCCINT	T18
NA	VCCINT	U13
NA	VCCINT	U18
NA	VCCINT	V13
NA	VCCINT	V14
NA	VCCINT	V15
NA	VCCINT	V16
NA	VCCINT	V17
NA	VCCINT	V18
NA	VCCINT	W11
NA	VCCINT	W12
NA	VCCINT	W19
NA	VCCINT	W20
NA	VCCINT	Y11
NA	VCCINT	Y12
NA	VCCINT	Y19
NA	VCCINT	Y20
NA	VCCO_0	B6
NA	VCCO_0	M15
NA	VCCO_0	M14
NA	VCCO_0	L15
NA	VCCO_0	L14
NA	VCCO_0	H14
NA	VCCO_0	M13

Table 26: **FG900 — XCV600E, XCV1000E, XCV1600E**

Bank	Pin Description	Pin #
NA	VCCO_0	C12
NA	VCCO_1	B25
NA	VCCO_1	C19
NA	VCCO_1	M18
NA	VCCO_1	M17
NA	VCCO_1	L17
NA	VCCO_1	H17
NA	VCCO_1	L16
NA	VCCO_1	M16
NA	VCCO_2	F29
NA	VCCO_2	M28
NA	VCCO_2	P23
NA	VCCO_2	R20
NA	VCCO_2	P20
NA	VCCO_2	R19
NA	VCCO_2	N19
NA	VCCO_2	P19
NA	VCCO_3	AE29
NA	VCCO_3	W28
NA	VCCO_3	U23
NA	VCCO_3	U20
NA	VCCO_3	T20
NA	VCCO_3	V19
NA	VCCO_3	T19
NA	VCCO_3	U19
NA	VCCO_4	AJ25
NA	VCCO_4	AH19
NA	VCCO_4	W18
NA	VCCO_4	AC17
NA	VCCO_4	Y17
NA	VCCO_4	W17
NA	VCCO_4	W16
NA	VCCO_4	Y16
NA	VCCO_5	AJ6
NA	VCCO_5	Y15
NA	VCCO_5	W15
NA	VCCO_5	AC14

Table 26: **FG900 — XCV600E, XCV1000E, XCV1600E**

Bank	Pin Description	Pin #
NA	VCCO_5	Y14
NA	VCCO_5	W14
NA	VCCO_5	W13
NA	VCCO_5	AH12
NA	VCCO_6	AE2
NA	VCCO_6	V12
NA	VCCO_6	U12
NA	VCCO_6	T12
NA	VCCO_6	U11
NA	VCCO_6	T11
NA	VCCO_6	U8
NA	VCCO_6	W3
NA	VCCO_7	F2
NA	VCCO_7	R12
NA	VCCO_7	P12
NA	VCCO_7	N12
NA	VCCO_7	R11
NA	VCCO_7	P11
NA	VCCO_7	P8
NA	VCCO_7	M3
NA	GND	Y18
NA	GND	AH7
NA	GND	AK30
NA	GND	AJ30
NA	GND	B30
NA	GND	A30
NA	GND	AK29
NA	GND	AJ29
NA	GND	AC29
NA	GND	H29
NA	GND	B29
NA	GND	A29
NA	GND	AH28
NA	GND	V28
NA	GND	N28
NA	GND	C28

Table 26: **FG900 — XCV600E, XCV1000E, XCV1600E**

Bank	Pin Description	Pin #
NA	GND	AG27
NA	GND	D27
NA	GND	AF26
NA	GND	E26
NA	GND	F25
NA	GND	AE25
NA	GND	G24
NA	GND	AJ23
NA	GND	AD24
NA	GND	H23
NA	GND	B23
NA	GND	AC23
NA	GND	AB22
NA	GND	V22
NA	GND	N22
NA	GND	AH18
NA	GND	AB18
NA	GND	J18
NA	GND	C18
NA	GND	U17
NA	GND	T17
NA	GND	R17
NA	GND	P17
NA	GND	U16
NA	GND	T16
NA	GND	R16
NA	GND	P16
NA	GND	U15
NA	GND	T15
NA	GND	R15
NA	GND	P15
NA	GND	U14
NA	GND	T14
NA	GND	R14
NA	GND	P14
NA	GND	AH13
NA	GND	AB13

Table 26: **FG900 — XCV600E, XCV1000E, XCV1600E**

Bank	Pin Description	Pin #
NA	GND	J13
NA	GND	C13
NA	GND	V9
NA	GND	N9
NA	GND	J9
NA	GND	AJ8
NA	GND	AC8
NA	GND	H8
NA	GND	AD7
NA	GND	B8
NA	GND	AE6
NA	GND	G7
NA	GND	F6
NA	GND	AF5
NA	GND	E5
NA	GND	AG4
NA	GND	D4
NA	GND	V3
NA	GND	N3
NA	GND	C3
NA	GND	AK2
NA	GND	AH3
NA	GND	AC2
NA	GND	H2
NA	GND	B2
NA	GND	A2
NA	GND	AK1
NA	GND	AJ2
NA	GND	AJ1
NA	GND	A1
NA	GND	B1

Notes:

1. V_{REF} or I/O option only in the XCV1000E and XCV1600E; otherwise, I/O option only.
2. V_{REF} or I/O option only in the XCV1600E; otherwise, I/O option only.
3. I/O option only in the XCV600E.
4. No Connect in the XCV600E.
5. No Connect in the XCV600E, 1000E.

FG900 Differential Pin Pairs

Virtex-E devices have differential pin pairs that can also provide other functions when not used as a differential pair. A √ in the AO column indicates that the pin pair can be used as an asynchronous output for all devices provided in this package. Pairs with a note number in the AO column are device dependent. They can have asynchronous outputs if the pin pair are in the same CLB row and column in the device. Numbers in this column refer to footnotes that indicate which devices have pin pairs than can be asynchronous outputs. The Other Functions column indicates alternative function(s) not available when the pair is used as a differential pair or differential clock.

Table 27: **FG900 Differential Pin Pair Summary XCV600E, XCV1000E, XCV1600E**

Pair	Bank	P Pin	N Pin	AO	Other Functions
GCLK LVDS					
3	0	C15	A15	NA	IO_DLL_ 34N
2	1	E15	E16	NA	IO_DLL_ 34P
1	5	AK16	AH16	NA	IO_DLL_ 177N
0	4	AJ16	AF16	NA	IO_DLL_ 177P
IO LVDS Total Pairs: 283, Asynchronous Output Pairs: 168					
0	0	F7	C4	4	-
1	0	G8	D5	2	-
2	0	H9	A3	2	VREF
3	0	J10	B4	2	-
4	0	D6	A4	√	-
5	0	B5	E7	√	VREF
6	0	F8	A5	1	-
7	0	N11	D7	1	-
8	0	E8	G9	√	-
9	0	J11	A6	√	VREF
10	0	B7	C7	2	-
11	0	H10	C8	2	-
12	0	F10	G10	√	-
13	0	H11	A8	√	VREF
14	0	C9	D9	NA	-
15	0	J12	B9	4	-
16	0	A9	E10	NA	VREF
17	0	B10	G11	NA	-

Table 27: **FG900 Differential Pin Pair Summary XCV600E, XCV1000E, XCV1600E**

Pair	Bank	P Pin	N Pin	AO	Other Functions
18	0	C10	H12	4	-
19	0	F11	H13	2	-
20	0	D11	E11	2	-
21	0	G12	B11	2	-
22	0	C11	F12	√	-
23	0	D12	A10	√	VREF
24	0	A11	E12	1	-
25	0	B12	G13	1	-
26	0	K13	A12	√	-
27	0	B13	F13	√	VREF
28	0	E13	G14	2	-
29	0	B14	D14	2	-
30	0	J14	A14	√	-
31	0	J15	K14	√	VREF
32	0	H15	B15	NA	-
33	0	D15	F15	√	VREF
34	1	E16	A15	NA	IO_ LVDS_DLL
35	1	F16	B16	4	VREF
36	1	H16	A16	4	-
37	1	K15	C16	√	VREF
38	1	G16	K16	√	-
39	1	E17	A17	2	-
40	1	C17	F17	2	-
41	1	A18	E18	√	VREF
42	1	A19	D18	√	-
43	1	G18	B19	1	-
44	1	H18	D19	1	-
45	1	F19	F18	√	VREF
46	1	K17	B20	√	-
47	1	A20	D20	2	-
48	1	C20	G19	2	-
49	1	E20	K18	2	-
50	1	D21	B21	4	-
51	1	A21	F20	√	-

Table 27: **FG900 Differential Pin Pair Summary XCV600E, XCV1000E, XCV1600E**

Pair	Bank	P Pin	N Pin	AO	Other Functions
52	1	A22	C21	√	VREF
53	1	B22	H19	4	-
54	1	D22	E21	4	-
55	1	C22	F21	√	VREF
56	1	E22	H20	√	-
57	1	A23	G21	2	-
58	1	K19	A24	2	-
59	1	B24	C24	√	VREF
60	1	G22	H21	√	-
61	1	C25	E23	1	-
62	1	A26	D24	1	-
63	1	K20	B26	√	VREF
64	1	J21	D25	√	-
65	1	F23	C26	2	-
66	1	G23	B27	2	VREF
67	1	F24	A27	2	-
68	1	A28	B28	4	-
69	1	C27	K21	√	CS
70	2	J22	E27	√	DIN, D0
71	2	C29	D28	NA	-
72	2	G25	E25	1	-
73	2	E28	C30	4	VREF
74	2	K22	F27	3	-
75	2	D30	J23	4	-
76	2	L21	F28	1	VREF
77	2	G28	E30	√	-
78	2	G27	E29	4	-
79	2	K23	H26	1	-
80	2	F30	L22	√	VREF
81	2	H27	G29	√	-
82	2	G30	M21	2	-
83	2	J24	J26	4	-
84	2	H30	L23	4	VREF
85	2	K26	J28	4	-

Table 27: **FG900 Differential Pin Pair Summary XCV600E, XCV1000E, XCV1600E**

Pair	Bank	P Pin	N Pin	AO	Other Functions
86	2	J29	K24	4	-
87	2	K27	J30	4	VREF
88	2	M22	K29	NA	D2
89	2	K28	L25	4	-
90	2	N21	K25	1	-
91	2	L24	L27	4	-
92	2	L29	M23	3	-
93	2	L26	L28	4	-
94	2	L30	M27	1	VREF
95	2	M26	M29	√	-
96	2	N29	M30	4	-
97	2	N25	N27	1	-
98	2	N30	P21	√	D3
99	2	N26	P28	√	-
100	2	P29	N24	2	-
101	2	P22	R26	√	-
102	2	P25	R29	4	VREF
103	2	R21	R28	4	-
104	2	R25	T30	4	VREF
105	2	P24	R27	4	-
106	3	R24	U29	NA	
107	3	R22	T27	4	VREF
108	3	R23	T28	4	-
109	3	T21	T25	4	VREF
110	3	U28	U30	4	-
111	3	T23	U27	2	-
112	3	U25	V27	√	-
113	3	U24	V29	√	VREF
114	3	W30	U22	1	-
115	3	U21	W29	4	-
116	3	V26	W27	√	-
117	3	W26	Y29	1	VREF
118	3	W25	Y30	4	-
119	3	V24	Y28	3	-

Table 27: **FG900 Differential Pin Pair Summary XCV600E, XCV1000E, XCV1600E**

Pair	Bank	P Pin	N Pin	AO	Other Functions
120	3	AA30	W24	4	-
121	3	AA29	V20	1	-
122	3	Y27	W23	NA	-
123	3	Y26	AB30	√	D5
124	3	V21	AA28	√	VREF
125	3	Y25	AA27	4	-
126	3	W22	Y23	4	-
127	3	Y24	AB28	4	VREF
128	3	AC30	AA25	√	-
129	3	W21	AA24	2	-
130	3	AB26	AD30	√	-
131	3	Y22	AC27	√	VREF
132	3	AD28	AB25	2	-
133	3	AC26	AE30	4	-
134	3	AD27	AF30	√	-
135	3	AF29	AB24	1	VREF
136	3	AB23	AE28	4	-
137	3	AG30	AC25	3	-
138	3	AE26	AG29	4	VREF
139	3	AH30	AC24	1	-
140	3	AF28	AD25	NA	-
141	3	AH29	AA22	√	INIT
142	4	AF27	AK28	√	-
143	4	AG26	AH27	4	-
144	4	AD23	AJ27	2	-
145	4	AB21	AF25	2	VREF
146	4	AC22	AH26	2	-
147	4	AA21	AG25	√	-
148	4	AJ26	AD22	√	VREF
149	4	AA20	AH25	1	-
150	4	AC21	AF24	1	-
151	4	AG24	AK26	√	-
152	4	AJ24	AF23	√	VREF
153	4	AE23	AB20	2	-

Table 27: **FG900 Differential Pin Pair Summary XCV600E, XCV1000E, XCV1600E**

Pair	Bank	P Pin	N Pin	AO	Other Functions
154	4	AC20	AG23	2	-
155	4	AF22	AE22	√	-
156	4	AJ22	AG22	√	VREF
157	4	AK24	AD20	NA	-
158	4	AA19	AF21	4	-
159	4	AH22	AA18	NA	VREF
160	4	AG21	AK23	NA	-
161	4	AH21	AD19	4	-
162	4	AE20	AJ21	2	-
163	4	AG20	AF20	2	-
164	4	AC18	AF19	2	-
165	4	AJ20	AE19	√	-
166	4	AK22	AH20	√	VREF
167	4	AG19	AB17	1	-
168	4	AJ19	AD17	1	-
169	4	AA16	AA17	√	-
170	4	AK21	AB16	√	VREF
171	4	AG18	AK20	2	-
172	4	AK19	AD16	2	-
173	4	AE16	AE17	√	-
174	4	AG17	AJ17	√	VREF
175	4	AD15	AH17	NA	-
176	4	AG16	AK17	4	VREF
177	5	AF16	AH16	NA	IO_ LVDS_DLL
178	5	AC15	AG15	4	VREF
179	5	AB15	AF15	√	-
180	5	AA15	AF14	√	VREF
181	5	AH15	AK15	√	-
182	5	AB14	AF13	2	-
183	5	AH14	AJ14	2	-
184	5	AE14	AG13	√	VREF
185	5	AK13	AD13	√	-
186	5	AE13	AF12	1	-
187	5	AC13	AA13	1	-

Table 27: **FG900 Differential Pin Pair Summary XCV600E, XCV1000E, XCV1600E**

Pair	Bank	P Pin	N Pin	AO	Other Functions
188	5	AA12	AJ12	√	VREF
189	5	AB12	AE11	√	-
190	5	AK12	Y13	2	-
191	5	AG11	AF11	2	-
192	5	AH11	AJ11	2	-
193	5	AE12	AG10	4	-
194	5	AD12	AK11	√	-
195	5	AJ10	AC12	√	VREF
196	5	AK10	AD11	4	-
197	5	AJ9	AE9	4	-
198	5	AH10	AF9	√	VREF
199	5	AH9	AK9	√	-
200	5	AF8	AB11	2	-
201	5	AC11	AG8	2	-
202	5	AK8	AF7	√	VREF
203	5	AG7	AK7	√	-
204	5	AJ7	AD10	1	-
205	5	AH6	AC10	1	-
206	5	AD9	AG6	√	VREF
207	5	AB10	AJ5	√	-
208	5	AD8	AK5	2	-
209	5	AC9	AJ4	2	VREF
210	5	AG5	AK4	2	-
211	5	AH5	AG3	4	-
212	6	AC6	AF3	√	-
213	6	AG2	AH2	NA	-
214	6	AE4	AB9	1	-
215	6	AH1	AE3	4	VREF
216	6	AD6	AB8	3	-
217	6	AA10	AG1	4	-
218	6	AD4	AA9	1	VREF
219	6	AD2	AD5	√	-
220	6	AF2	AD3	4	-
221	6	AA7	AA8	1	-

Table 27: **FG900 Differential Pin Pair Summary XCV600E, XCV1000E, XCV1600E**

Pair	Bank	P Pin	N Pin	AO	Other Functions
222	6	Y9	AF1	√	VREF
223	6	AC4	AB6	√	-
224	6	W8	AE1	2	-
225	6	AB4	Y8	4	-
226	6	W9	AB3	4	VREF
227	6	W10	AA5	4	-
228	6	V10	AB1	4	-
229	6	AC1	Y7	4	VREF
230	6	AA3	V11	NA	-
231	6	U10	AA2	4	-
232	6	AA6	W7	1	-
233	6	Y4	Y6	4	-
234	6	V7	AA1	3	-
235	6	Y2	Y3	4	-
236	6	W5	Y5	1	VREF
237	6	W6	W4	√	-
238	6	W2	V6	4	-
239	6	V4	U9	1	-
240	6	T8	AB2	√	VREF
241	6	W1	U5	√	-
242	6	T9	Y1	2	-
243	6	U3	T7	4	-
244	6	V2	T5	4	VREF
245	6	T6	R9	4	-
246	6	U2	T4	4	VREF
247	7	R10	T1	NA	
248	7	R6	R5	4	-
249	7	R4	R8	4	VREF
250	7	R3	R7	4	-
251	7	P6	P10	4	VREF
252	7	P2	P5	4	-
253	7	P4	P7	2	-
254	7	R2	N4	√	-
255	7	P1	N7	√	VREF

Table 27: **FG900 Differential Pin Pair Summary XCV600E, XCV1000E, XCV1600E**

Pair	Bank	P Pin	N Pin	AO	Other Functions
256	7	N6	M6	1	-
257	7	N1	N5	4	-
258	7	M5	M4	√	-
259	7	M1	M2	1	VREF
260	7	L2	L4	4	-
261	7	L5	M7	3	-
262	7	M8	L1	4	-
263	7	M9	K2	1	-
264	7	M10	L3	NA	-
265	7	K1	K5	√	-
266	7	K3	L6	√	VREF
267	7	K4	L7	4	-
268	7	J5	L8	4	-
269	7	H4	K6	4	VREF
270	7	K7	H1	4	-
271	7	J2	J7	2	-
272	7	G2	H5	√	-
273	7	G5	L9	√	VREF
274	7	K8	F3	1	-
275	7	E1	G3	4	-
276	7	E2	H6	√	-
277	7	K9	E4	1	VREF
278	7	F4	J8	4	-
279	7	H7	D1	3	-
280	7	C2	G6	4	VREF
281	7	F5	D2	1	-
282	7	K10	D3	4	-

Notes:
1. AO in the XCV600E, 1000E.
2. AO in the XCV1000E.
3. AO in the XCV1600E.
4. AO in the XCV1000E, XCV1600E.

FG1156 Fine-Pitch Ball Grid Array Package

XCV1000E, XCV1600E, XCV2000E, XCV2600E, and XCV3200E devices in the FG1156 fine-pitch Ball Grid Array package have footprint compatibility. Pins labeled IO_VREF can be used as either V_{REF} or general I/O, unless indicated in the footnotes. If the pin is not used as V_{REF}, it can be used as general I/O. Immediately following Table 28, see Table 29 for Differential Pair information.

Table 28: **FG1156 — XCV1000E, XCV1600E, XCV2000E, XCV2600E, XCV3200E**

Bank	Pin Description	Pin #
0	GCK3	E17
0	IO	B4
0	IO	B9
0	IO	B10
0	IO	D9[3]
0	IO	D16
0	IO	E7[3]
0	IO	E11[3]
0	IO	E13[3]
0	IO	E16[3]
0	IO	F17[3]
0	IO	J12[3]
0	IO	J13[3]
0	IO	J14[3]
0	IO	K11[3]
0	IO_L0N_Y	F7
0	IO_L0P_Y	H9
0	IO_L1N_Y	C5
0	IO_L1P_Y	J10
0	IO_VREF_L2N_Y	E6
0	IO_L2P_Y	D6
0	IO_L3N_Y	A4
0	IO_L3P_Y	G8
0	IO_L4N_YY	C6
0	IO_L4P_YY	J11
0	IO_VREF_L5N_YY	G9
0	IO_L5P_YY	F8
0	IO_L6N_YY	A5[4]

Table 28: **FG1156 — XCV1000E, XCV1600E, XCV2000E, XCV2600E, XCV3200E**

Bank	Pin Description	Pin #
0	IO_L6P_YY	H10[5]
0	IO_L7N_Y	D7
0	IO_L7P_Y	B5
0	IO_L8N_Y	K12
0	IO_L8P_Y	E8
0	IO_L9N	B6[4]
0	IO_L9P	F9[5]
0	IO_L10N_YY	G10
0	IO_L10P_YY	C7
0	IO_VREF_L11N_YY	D8
0	IO_L11P_YY	B7
0	IO_L12N	H11[4]
0	IO_L12P	C8[5]
0	IO_L13N_Y	E9
0	IO_L13P_Y	B8
0	IO_VREF_L14N_Y	K13[2]
0	IO_L14P_Y	G11
0	IO_L15N	A8[4]
0	IO_L15P	F10[5]
0	IO_L16N_YY	C9
0	IO_L16P_YY	H12
0	IO_VREF_L17N_YY	D10
0	IO_L17P_YY	A9
0	IO_L18N_Y	F11
0	IO_L18P_Y	A10
0	IO_L19N_Y	K14
0	IO_L19P_Y	C10
0	IO_VREF_L20N_YY	H13
0	IO_L20P_YY	G12
0	IO_L21N_YY	A11
0	IO_L21P_YY	B11
0	IO_L22N_Y	E12
0	IO_L22P_Y	D11
0	IO_L23N_Y	G13

Table 28: **FG1156 — XCV1000E, XCV1600E, XCV2000E, XCV2600E, XCV3200E**

Bank	Pin Description	Pin #
0	IO_L23P_Y	C12
0	IO_L24N_Y	K15
0	IO_L24P_Y	A12
0	IO_L25N_Y	B12
0	IO_L25P_Y	H14
0	IO_L26N_YY	D12
0	IO_L26P_YY	F13
0	IO_VREF_L27N_YY	A13
0	IO_L27P_YY	B13
0	IO_L28N_YY	J15[4]
0	IO_L28P_YY	G14[5]
0	IO_L29N_Y	C13
0	IO_L29P_Y	F14
0	IO_L30N_Y	H15
0	IO_L30P_Y	D13
0	IO_L31N	A14[4]
0	IO_L31P	K16[5]
0	IO_L32N_YY	E14
0	IO_L32P_YY	B14
0	IO_VREF_L33N_YY	G15
0	IO_L33P_YY	D14
0	IO_L34N	J16[4]
0	IO_L34P	D15[5]
0	IO_L35N_Y	F15
0	IO_L35P_Y	B15
0	IO_L36N_Y	A15
0	IO_L36P_Y	E15
0	IO_L37N	G16[4]
0	IO_L37P	A16[5]
0	IO_L38N_YY	F16
0	IO_L38P_YY	J17
0	IO_VREF_L39N_YY	C16
0	IO_L39P_YY	B16
0	IO_L40N_Y	H17

Table 28: **FG1156 — XCV1000E, XCV1600E, XCV2000E, XCV2600E, XCV3200E**

Bank	Pin Description	Pin #
0	IO_L40P_Y	A17
0	IO_VREF_L41N_Y	G17[1]
0	IO_L41P_Y	B17
0	IO_LVDS_DLL_L42N	C17
1	GCK2	D17
1	IO	A18
1	IO	B18[3]
1	IO	B24
1	IO	B25
1	IO	E22[3]
1	IO	E23[3]
1	IO	D18[3]
1	IO	D19
1	IO	D25[3]
1	IO	D26[3]
1	IO	D28[3]
1	IO	D29[3]
1	IO	G23[3]
1	IO	J23[3]
1	IO_LVDS_DLL_L42P	J18
1	IO_L43N_Y	G18
1	IO_VREF_L43P_Y	C18[1]
1	IO_L44N_Y	H18
1	IO_L44P_Y	F18
1	IO_L45N_YY	B19
1	IO_VREF_L45P_YY	A19
1	IO_L46N_YY	K19
1	IO_L46P_YY	C19
1	IO_L47N	F19[5]
1	IO_L47P	E19[4]
1	IO_L48N_Y	G19
1	IO_L48P_Y	J19
1	IO_L49N_Y	A20

Table 28: **FG1156 — XCV1000E, XCV1600E, XCV2000E, XCV2600E, XCV3200E**

Bank	Pin Description	Pin #
1	IO_L49P_Y	G20
1	IO_L50N	B20[5]
1	IO_L50P	F20[4]
1	IO_L51N_YY	D20
1	IO_VREF_L51P_YY	E20
1	IO_L52N_YY	H20
1	IO_L52P_YY	A21
1	IO_L53N	E21[5]
1	IO_L53P	J20[4]
1	IO_L54N_Y	D21
1	IO_L54P_Y	K20
1	IO_L55N_Y	B21
1	IO_L55P_Y	H21
1	IO_L56N_YY	G21[5]
1	IO_L56P_YY	F21[4]
1	IO_L57N_YY	A22
1	IO_VREF_L57P_YY	B22
1	IO_L58N_YY	J21
1	IO_L58P_YY	C22
1	IO_L59N_Y	D22
1	IO_L59P_Y	G22
1	IO_L60N_Y	K21
1	IO_L60P_Y	A23
1	IO_L61N_Y	F22
1	IO_L61P_Y	B23
1	IO_L62N_Y	C23
1	IO_L62P_Y	H22
1	IO_L63N_YY	D23
1	IO_L63P_YY	K22
1	IO_L64N_YY	A24
1	IO_VREF_L64P_YY	J22
1	IO_L65N_Y	H23
1	IO_L65P_Y	D24
1	IO_L66N_Y	A25

Table 28: **FG1156 — XCV1000E, XCV1600E, XCV2000E, XCV2600E, XCV3200E**

Bank	Pin Description	Pin #
1	IO_L66P_Y	E24
1	IO_L67N_YY	A26
1	IO_VREF_L67P_YY	C25
1	IO_L68N_YY	F24
1	IO_L68P_YY	B26
1	IO_L69N	K23[5]
1	IO_L69P	F25[4]
1	IO_L70N_Y	C26
1	IO_VREF_L70P_Y	H24[2]
1	IO_L71N_Y	G24
1	IO_L71P_Y	A27
1	IO_L72N	B27[5]
1	IO_L72P	G25[4]
1	IO_L73N_YY	E26
1	IO_VREF_L73P_YY	C27
1	IO_L74N_YY	J24
1	IO_L74P_YY	B28
1	IO_L75N	K24[5]
1	IO_L75P	H25[4]
1	IO_L76N_Y	D27
1	IO_L76P_Y	F26
1	IO_L77N_Y	G26
1	IO_L77P_Y	C28
1	IO_L78N_YY	E27[5]
1	IO_L78P_YY	J25[4]
1	IO_L79N_YY	A30
1	IO_VREF_L79P_YY	H26
1	IO_L80N_YY	G27
1	IO_L80P_YY	B29
1	IO_L81N_Y	F27
1	IO_L81P_Y	C29
1	IO_L82N_Y	E28
1	IO_VREF_L82P_Y	F28
1	IO_L83N_Y	L25

Table 28: **FG1156 — XCV1000E, XCV1600E, XCV2000E, XCV2600E, XCV3200E**

Bank	Pin Description	Pin #
1	IO_L83P_Y	B30
1	IO_L84N	B31
1	IO_L84P	E29
1	IO_WRITE_L85N_YY	A31
1	IO_CS_L85P_YY	D30
2	IO	F31[3]
2	IO	J32
2	IO	K27[3]
2	IO	K31[3]
2	IO	L28[3]
2	IO	L30[3]
2	IO	M32[3]
2	IO	N26
2	IO	N28[3]
2	IO	P25[3]
2	IO	U26[3]
2	IO	U30
2	IO	U32[3]
2	IO	U34
2	IO_D2	M30
2	IO_DOUT_BUSY_L86P_YY	D32
2	IO_DIN_D0_L86N_YY	J27
2	IO_L87P_Y	E31
2	IO_L87N_Y	F30
2	IO_L88P_Y	G29
2	IO_L88N_Y	F32
2	IO_VREF_L89P_Y	E32
2	IO_L89N_Y	G30
2	IO_L90P	M25
2	IO_L90N	G31
2	IO_L91P_Y	L26
2	IO_L91N_Y	D33
2	IO_VREF_L92P_Y	D34

Table 28: **FG1156 — XCV1000E, XCV1600E, XCV2000E, XCV2600E, XCV3200E**

Bank	Pin Description	Pin #
2	IO_L92N_Y	H29
2	IO_L93P_YY	J28[4]
2	IO_L93N_YY	E33[5]
2	IO_L94P_YY	H28
2	IO_L94N_YY	H30
2	IO_L95P_Y	H32
2	IO_L95N_Y	K28
2	IO_L96P_Y	L27[4]
2	IO_L96N_Y	F33[5]
2	IO_L97P_Y	M26
2	IO_L97N_Y	E34
2	IO_VREF_L98P_YY	H31
2	IO_L98N_YY	G32
2	IO_L99P_YY	N25[4]
2	IO_L99N_YY	J31[5]
2	IO_L100P_YY	J30
2	IO_L100N_YY	G33
2	IO_VREF_L101P_Y	H34[2]
2	IO_L101N_Y	J29
2	IO_L102P	M27[4]
2	IO_L102N	H33[5]
2	IO_L103P_Y	K29
2	IO_L103N_Y	J34
2	IO_VREF_L104P_YY	L29
2	IO_L104N_YY	J33
2	IO_L105P_YY	M28
2	IO_L105N_YY	K34
2	IO_L106P_Y	N27
2	IO_L106N_Y	L34
2	IO_VREF_L107P_YY	K33
2	IO_D1_L107N_YY	P26
2	IO_L108P_Y	R25
2	IO_L108N_Y	M34
2	IO_L109P_Y	L31

Table 28: **FG1156 — XCV1000E, XCV1600E, XCV2000E, XCV2600E, XCV3200E**

Bank	Pin Description	Pin #
2	IO_L109N_Y	L33
2	IO_L110P_Y	P27
2	IO_L110N_Y	M33
2	IO_L111P	M31
2	IO_L111N	R26
2	IO_L112P_Y	N30
2	IO_L112N_Y	P28
2	IO_VREF_L113P_Y	N29
2	IO_L113N_Y	N33
2	IO_L114P_YY	T25[4]
2	IO_L114N_YY	N34[5]
2	IO_L115P_YY	P34
2	IO_L115N_YY	R27
2	IO_L116P_Y	P29
2	IO_L116N_Y	P31
2	IO_L117P_Y	P33[4]
2	IO_L117N_Y	T26[5]
2	IO_L118P_Y	R34
2	IO_L118N_Y	R28
2	IO_VREF_L119P_YY	N31
2	IO_D3_L119N_YY	N32
2	IO_L120P_YY	P30[4]
2	IO_L120N_YY	R33[5]
2	IO_L121P_YY	R29
2	IO_L121N_YY	T34
2	IO_L122P_Y	R30
2	IO_L122N_Y	T30
2	IO_L123P	T28[4]
2	IO_L123N	R31[5]
2	IO_L124P_Y	T29
2	IO_L124N_Y	U27
2	IO_VREF_L125P_YY	T31
2	IO_L125N_YY	T33
2	IO_L126P_YY	U28

Table 28: **FG1156 — XCV1000E, XCV1600E, XCV2000E, XCV2600E, XCV3200E**

Bank	Pin Description	Pin #
2	IO_L126N_YY	T32
2	IO_VREF_L127P_Y	U29[1]
2	IO_L127N_Y	U33
2	IO_L128P_YY	V33
2	IO_L128N_YY	U31
3	IO	V27[3]
3	IO	V31
3	IO	V32[3]
3	IO	W33
3	IO	AB25[3]
3	IO	AB26[3]
3	IO	AB31[3]
3	IO	AC31[3]
3	IO	AF34
3	IO	AG31[3]
3	IO	AG33[3]
3	IO	AG34
3	IO	AH29[3]
3	IO	AJ30[3]
3	IO_L129P_Y	V26
3	IO_VREF_L129N_Y	V30[1]
3	IO_L130P_YY	W34
3	IO_L130N_YY	V28
3	IO_L131P_YY	W32
3	IO_VREF_L131N_YY	W30
3	IO_L132P_Y	V29
3	IO_L132N_Y	Y34
3	IO_L133P	W29[5]
3	IO_L133N	Y33[4]
3	IO_L134P_Y	W26
3	IO_L134N_Y	W28
3	IO_L135P_YY	Y31
3	IO_L135N_YY	Y30

Table 28: **FG1156 — XCV1000E, XCV1600E, XCV2000E, XCV2600E, XCV3200E**

Bank	Pin Description	Pin #
3	IO_L136P_YY	AA34[5]
3	IO_L136N_YY	W31[4]
3	IO_D4_L137P_YY	AA33
3	IO_VREF_L137N_YY	Y29
3	IO_L138P_Y	W25
3	IO_L138N_Y	AB34
3	IO_L139P_Y	Y28[5]
3	IO_L139N_Y	AB33[4]
3	IO_L140P_Y	AA30
3	IO_L140N_Y	Y26
3	IO_L141P_YY	Y27
3	IO_L141N_YY	AA31
3	IO_L142P_YY	AA27[5]
3	IO_L142N_YY	AA29[4]
3	IO_L143P_Y	AB32
3	IO_VREF_L143N_Y	AB29
3	IO_L144P_Y	AA28
3	IO_L144N_Y	AC34
3	IO_L145P	Y25
3	IO_L145N	AD34
3	IO_L146P_Y	AB30
3	IO_L146N_Y	AC33
3	IO_L147P_Y	AA26
3	IO_L147N_Y	AC32
3	IO_L148P_Y	AD33
3	IO_L148N_Y	AB28
3	IO_L149P_YY	AE34
3	IO_D5_L149N_YY	AB27
3	IO_D6_L150P_YY	AE33
3	IO_VREF_L150N_YY	AC30
3	IO_L151P_Y	AA25
3	IO_L151N_Y	AE32
3	IO_L152P_YY	AE31
3	IO_L152N_YY	AD29

Table 28: **FG1156 — XCV1000E, XCV1600E, XCV2000E, XCV2600E, XCV3200E**

Bank	Pin Description	Pin #
3	IO_L153P_YY	AD31
3	IO_VREF_L153N_YY	AF33
3	IO_L154P_Y	AC28
3	IO_L154N_Y	AF31
3	IO_L155P_Y	AC27[5]
3	IO_L155N_Y	AF32[4]
3	IO_L156P_Y	AE29
3	IO_VREF_L156N_Y	AD28[2]
3	IO_L157P_YY	AD30
3	IO_L157N_YY	AG32
3	IO_L158P_YY	AC26[5]
3	IO_L158N_YY	AH33[4]
3	IO_L159P_YY	AD26
3	IO_VREF_L159N_YY	AF30
3	IO_L160P_Y	AC25
3	IO_L160N_Y	AH32
3	IO_L161P_Y	AE28[5]
3	IO_L161N_Y	AL34[4]
3	IO_L162P_Y	AG30
3	IO_L162N_Y	AD27
3	IO_L163P_YY	AF29
3	IO_L163N_YY	AK34
3	IO_L164P_YY	AD25[5]
3	IO_L164N_YY	AE27[4]
3	IO_L165P_Y	AJ33
3	IO_VREF_L165N_Y	AH31
3	IO_L166P_Y	AE26
3	IO_L166N_Y	AL33
3	IO_L167P	AF28
3	IO_L167N	AL32
3	IO_L168P_Y	AJ31
3	IO_VREF_L168N_Y	AF27
3	IO_L169P_Y	AG29
3	IO_L169N_Y	AJ32

Table 28: **FG1156 — XCV1000E, XCV1600E, XCV2000E, XCV2600E, XCV3200E**

Bank	Pin Description	Pin #
3	IO_L170P_Y	AK33
3	IO_L170N_Y	AH30
3	IO_D7_L171P_YY	AK32
3	IO_INIT_L171N_YY	AK31
3	IO	V34
4	GCK0	AH18
4	IO	AE21[3]
4	IO	AG18
4	IO	AG23
4	IO	AH24[3]
4	IO	AH25[3]
4	IO	AJ28[3]
4	IO	AK18[3]
4	IO	AK19[3]
4	IO	AL25
4	IO	AL27[3]
4	IO	AL30[3]
4	IO	AN18
4	IO	AN22[3]
4	IO	AN24[3]
4	IO_L172P_YY	AP31
4	IO_L172N_YY	AK29
4	IO_L173P_Y	AP30
4	IO_L173N_Y	AN31
4	IO_L174P_Y	AH27
4	IO_L174N_Y	AN30
4	IO_VREF_L175P_Y	AM30
4	IO_L175N_Y	AK28
4	IO_L176P_Y	AG26
4	IO_L176N_Y	AN29
4	IO_L177P_YY	AF25
4	IO_L177N_YY	AM29
4	IO_VREF_L178P_YY	AL29

Table 28: **FG1156 — XCV1000E, XCV1600E, XCV2000E, XCV2600E, XCV3200E**

Bank	Pin Description	Pin #
4	IO_L178N_YY	AL28
4	IO_L179P_YY	AE24[4]
4	IO_L179N_YY	AN28[5]
4	IO_L180P_Y	AJ27
4	IO_L180N_Y	AH26
4	IO_L181P_Y	AG25
4	IO_L181N_Y	AK27
4	IO_L182P	AM28[4]
4	IO_L182N	AF24[5]
4	IO_L183P_YY	AJ26
4	IO_L183N_YY	AP27
4	IO_VREF_L184P_YY	AK26
4	IO_L184N_YY	AN27
4	IO_L185P	AE23[4]
4	IO_L185N	AM27[5]
4	IO_L186P_Y	AL26
4	IO_L186N_Y	AP26
4	IO_VREF_L187P_Y	AN26[2]
4	IO_L187N_Y	AJ25
4	IO_L188P	AG24[4]
4	IO_L188N	AP25[5]
4	IO_L189P_YY	AF23
4	IO_L189N_YY	AM26
4	IO_VREF_L190P_YY	AJ24
4	IO_L190N_YY	AN25
4	IO_L191P_Y	AE22
4	IO_L191N_Y	AM25
4	IO_L192P_Y	AK24
4	IO_L192N_Y	AH23
4	IO_VREF_L193P_YY	AF22
4	IO_L193N_YY	AP24
4	IO_L194P_YY	AL24
4	IO_L194N_YY	AK23
4	IO_L195P_Y	AG22

Table 28: **FG1156 — XCV1000E, XCV1600E, XCV2000E, XCV2600E, XCV3200E**

Bank	Pin Description	Pin #
4	IO_L195N_Y	AN23
4	IO_L196P_Y	AP23
4	IO_L196N_Y	AM23
4	IO_L197P_Y	AH22
4	IO_L197N_Y	AP22
4	IO_L198P_Y	AL23
4	IO_L198N_Y	AF21
4	IO_L199P_YY	AL22
4	IO_L199N_YY	AJ22
4	IO_VREF_L200P_YY	AK22
4	IO_L200N_YY	AM22
4	IO_L201P_YY	AG21[4]
4	IO_L201N_YY	AJ21[5]
4	IO_L202P_Y	AP21
4	IO_L202N_Y	AE20
4	IO_L203P_Y	AH21
4	IO_L203N_Y	AL21
4	IO_L204P	AN21[4]
4	IO_L204N	AF20[5]
4	IO_L205P_YY	AK21
4	IO_L205N_YY	AP20
4	IO_VREF_L206P_YY	AE19
4	IO_L206N_YY	AN20
4	IO_L207P_Y	AG20[4]
4	IO_L207N_Y	AL20[5]
4	IO_L208P_Y	AH20
4	IO_L208N_Y	AK20
4	IO_L209P_Y	AN19
4	IO_L209N_Y	AJ20
4	IO_L210P	AF19[4]
4	IO_L210N	AP19[5]
4	IO_L211P_YY	AM19
4	IO_L211N_YY	AH19
4	IO_VREF_L212P_YY	AJ19

Table 28: **FG1156 — XCV1000E, XCV1600E, XCV2000E, XCV2600E, XCV3200E**

Bank	Pin Description	Pin #
4	IO_L212N_YY	AP18
4	IO_L213P_Y	AF18
4	IO_L213N_Y	AP17
4	IO_VREF_L214P_Y	AJ18[1]
4	IO_L214N_Y	AL18
4	IO_LVDS_DLL_L215P	AM18
5	GCK1	AL19
5	IO	AF17[3]
5	IO	AG12[3]
5	IO	AH12
5	IO	AJ10[3]
5	IO	AJ11[3]
5	IO	AK7[3]
5	IO	AK13[3]
5	IO	AL13[3]
5	IO	AM4[3]
5	IO	AN9
5	IO	AN10[3]
5	IO	AN16
5	IO	AN17[3]
5	IO_LVDS_DLL_L215N	AL17
5	IO_L216P_Y	AH17
5	IO_VREF_L216N_Y	AM17[1]
5	IO_L217P_Y	AJ17
5	IO_L217N_Y	AG17
5	IO_L218P_YY	AP16
5	IO_VREF_L218N_YY	AL16
5	IO_L219P_YY	AJ16
5	IO_L219N_YY	AM16
5	IO_L220P	AK16[5]
5	IO_L220N	AP15[4]
5	IO_L221P_Y	AL15
5	IO_L221N_Y	AH16

Table 28: **FG1156 — XCV1000E, XCV1600E, XCV2000E, XCV2600E, XCV3200E**

Bank	Pin Description	Pin #
5	IO_L222P_Y	AN15
5	IO_L222N_Y	AF16
5	IO_L223P_Y	AP14[5]
5	IO_L223N_Y	AE16[4]
5	IO_L224P_YY	AK15
5	IO_VREF_L224N_YY	AJ15
5	IO_L225P_YY	AH15
5	IO_L225N_YY	AN14
5	IO_L226P	AK14[5]
5	IO_L226N	AG15[4]
5	IO_L227P_Y	AM13
5	IO_L227N_Y	AF15
5	IO_L228P_Y	AG14
5	IO_L228N_Y	AP13
5	IO_L229P_YY	AE14[5]
5	IO_L229N_YY	AE15[4]
5	IO_L230P_YY	AN13
5	IO_VREF_L230N_YY	AG13
5	IO_L231P_YY	AH14
5	IO_L231N_YY	AP12
5	IO_L232P_Y	AJ14
5	IO_L232N_Y	AL14
5	IO_L233P_Y	AF13
5	IO_L233N_Y	AN12
5	IO_L234P_Y	AF14
5	IO_L234N_Y	AP11
5	IO_L235P_Y	AN11
5	IO_L235N_Y	AH13
5	IO_L236P_YY	AM12
5	IO_L236N_YY	AL12
5	IO_L237P_YY	AJ13
5	IO_VREF_L237N_YY	AP10
5	IO_L238P_Y	AK12
5	IO_L238N_Y	AM10

Table 28: **FG1156 — XCV1000E, XCV1600E, XCV2000E, XCV2600E, XCV3200E**

Bank	Pin Description	Pin #
5	IO_L239P_Y	AP9
5	IO_L239N_Y	AK11
5	IO_L240P_YY	AL11
5	IO_VREF_L240N_YY	AL10
5	IO_L241P_YY	AE13
5	IO_L241N_YY	AM9
5	IO_L242P	AF12[5]
5	IO_L242N	AP8[4]
5	IO_L243P_Y	AL9
5	IO_VREF_L243N_Y	AH11[2]
5	IO_L244P_Y	AF11
5	IO_L244N_Y	AN8
5	IO_L245P_Y	AM8[5]
5	IO_L245N_Y	AG11[4]
5	IO_L246P_YY	AL8
5	IO_VREF_L246N_YY	AK9
5	IO_L247P_YY	AH10
5	IO_L247N_YY	AN7
5	IO_L248P	AE12[5]
5	IO_L248N	AJ9[4]
5	IO_L249P_Y	AM7
5	IO_L249N_Y	AL7
5	IO_L250P_Y	AG10
5	IO_L250N_Y	AN6
5	IO_L251P_YY	AK8[5]
5	IO_L251N_YY	AH9[4]
5	IO_L252P_YY	AP5
5	IO_VREF_L252N_YY	AJ8
5	IO_L253P_YY	AE11
5	IO_L253N_YY	AN5
5	IO_L254P_Y	AF10
5	IO_L254N_Y	AM6
5	IO_L255P_Y	AL6
5	IO_VREF_L255N_Y	AG9

Table 28: **FG1156 — XCV1000E, XCV1600E, XCV2000E, XCV2600E, XCV3200E**

Bank	Pin Description	Pin #
5	IO_L256P_Y	AH8
5	IO_L256N_Y	AP4
5	IO_L257P_Y	AN4
5	IO_L257N_Y	AJ7
5	IO_L258P_YY	AM5
5	IO_L258N_YY	AK6
6	IO	T1
6	IO	V2
6	IO	V3
6	IO	V5[3]
6	IO	V8[3]
6	IO	AA10[3]
6	IO	AB5[3]
6	IO	AB7[3]
6	IO	AB9[3]
6	IO	AD7[3]
6	IO	AD8[3]
6	IO	AE2
6	IO	AE4
6	IO	AJ4[3]
6	IO	AH5[3]
6	IO_L259N_YY	AH6
6	IO_L259P_YY	AF8
6	IO_L260N_Y	AE9
6	IO_L260P_Y	AK3
6	IO_L261N_Y	AD10
6	IO_L261P_Y	AL2
6	IO_VREF_L262N_Y	AL1
6	IO_L262P_Y	AH4
6	IO_L263N	AG6
6	IO_L263P	AK1
6	IO_L264N_Y	AF7
6	IO_L264P_Y	AK2

Table 28: **FG1156 — XCV1000E, XCV1600E, XCV2000E, XCV2600E, XCV3200E**

Bank	Pin Description	Pin #
6	IO_VREF_L265N_Y	AJ3
6	IO_L265P_Y	AG5
6	IO_L266N_YY	AD9[4]
6	IO_L266P_YY	AJ2[5]
6	IO_L267N_YY	AC10
6	IO_L267P_YY	AH2
6	IO_L268N_Y	AH3
6	IO_L268P_Y	AF5
6	IO_L269N_Y	AE8[4]
6	IO_L269P_Y	AG3[5]
6	IO_L270N_Y	AE7
6	IO_L270P_Y	AG2
6	IO_VREF_L271N_YY	AF6
6	IO_L271P_YY	AG1
6	IO_L272N_YY	AC9[4]
6	IO_L272P_YY	AG4[5]
6	IO_L273N_YY	AE6
6	IO_L273P_YY	AF3
6	IO_VREF_L274N_Y	AF1[2]
6	IO_L274P_Y	AF4
6	IO_L275N	AB10[4]
6	IO_L275P	AF2[5]
6	IO_L276N_Y	AC8
6	IO_L276P_Y	AE1
6	IO_VREF_L277N_YY	AD5
6	IO_L277P_YY	AE3
6	IO_L278N_YY	AC7
6	IO_L278P_YY	AD1
6	IO_L279N_Y	AD6
6	IO_L279P_Y	AD2
6	IO_VREF_L280N_YY	AB8
6	IO_L280P_YY	AC1
6	IO_L281N_YY	AC5
6	IO_L281P_YY	AC2

Table 28: **FG1156 — XCV1000E, XCV1600E, XCV2000E, XCV2600E, XCV3200E**

Bank	Pin Description	Pin #
6	IO_L282N_Y	AA9
6	IO_L282P_Y	AC3
6	IO_L283N_Y	AC4
6	IO_L283P_Y	AD4
6	IO_L284N_Y	AA8
6	IO_L284P_Y	AB6
6	IO_L285N	AB1
6	IO_L285P	Y10
6	IO_L286N_Y	AB2
6	IO_L286P_Y	AA7
6	IO_VREF_L287N_Y	AA4
6	IO_L287P_Y	AA1
6	IO_L288N_YY	Y9[4]
6	IO_L288P_YY	AB4[5]
6	IO_L289N_YY	AA2
6	IO_L289P_YY	Y8
6	IO_L290N_Y	AA6
6	IO_L290P_Y	AA5
6	IO_L291N_Y	AB3[4]
6	IO_L291P_Y	Y7[5]
6	IO_L292N_Y	Y1
6	IO_L292P_Y	W10
6	IO_VREF_L293N_YY	Y5
6	IO_L293P_YY	Y2
6	IO_L294N_YY	W9[4]
6	IO_L294P_YY	W2[5]
6	IO_L295N_YY	W7
6	IO_L295P_YY	Y4
6	IO_L296N_Y	W1
6	IO_L296P_Y	Y6
6	IO_L297N_Y	W6[4]
6	IO_L297P_Y	W3[5]
6	IO_L298N_Y	V9
6	IO_L298P_Y	W4

Table 28: **FG1156 — XCV1000E, XCV1600E, XCV2000E, XCV2600E, XCV3200E**

Bank	Pin Description	Pin #
6	IO_VREF_L299N_YY	W5
6	IO_L299P_YY	V1
6	IO_L300N_YY	V7
6	IO_L300P_YY	U2
6	IO_VREF_L301N_Y	V6[1]
6	IO_L301P_Y	U1
7	IO	F5
7	IO	G6[3]
7	IO	H1
7	IO	H7[3]
7	IO	K2[3]
7	IO	K4[3]
7	IO	L6[3]
7	IO	M5[3]
7	IO	M10[3]
7	IO	N5[3]
7	IO	N10
7	IO	R7[4]
7	IO	T2
7	IO	T7[3]
7	IO	U8
7	IO	V4[3]
7	IO_L302N_YY	U9
7	IO_L302P_YY	U4
7	IO_L303N_Y	U7
7	IO_VREF_L303P_Y	U5[1]
7	IO_L304N_YY	U3
7	IO_L304P_YY	U6
7	IO_L305N_YY	T3
7	IO_VREF_L305P_YY	T6
7	IO_L306N_Y	T9
7	IO_L306P_Y	T4
7	IO_L307N_Y	T5[5]

Table 28: **FG1156 — XCV1000E, XCV1600E, XCV2000E, XCV2600E, XCV3200E**

Bank	Pin Description	Pin #
7	IO_L307P_Y	R1[4]
7	IO_L308N_Y	R6
7	IO_L308P_Y	T10
7	IO_L309N_YY	R2
7	IO_L309P_YY	R5
7	IO_L310N_YY	P1
7	IO_VREF_L310P_YY	P5
7	IO_L311N_Y	R8
7	IO_L311P_Y	P2
7	IO_L312N_Y	R9[5]
7	IO_L312P_Y	N1[4]
7	IO_L313N_Y	P4
7	IO_L313P_Y	R10
7	IO_L314N_YY	P8
7	IO_L314P_YY	N2
7	IO_L315N_YY	P6[5]
7	IO_L315P_YY	P7[4]
7	IO_L316N_Y	M1
7	IO_VREF_L316P_Y	N4
7	IO_L317N_Y	N6
7	IO_L317P_Y	N3
7	IO_L318N	P9
7	IO_L318P	M2
7	IO_L319N_Y	N7
7	IO_L319P_Y	M3
7	IO_L320N_Y	P10
7	IO_L320P_Y	M4
7	IO_L321N_Y	L1
7	IO_L321P_Y	N8
7	IO_L322N_YY	L2
7	IO_L322P_YY	N9
7	IO_L323N_YY	M7
7	IO_VREF_L323P_YY	K1
7	IO_L324N_Y	M8

Table 28: **FG1156 — XCV1000E, XCV1600E, XCV2000E, XCV2600E, XCV3200E**

Bank	Pin Description	Pin #
7	IO_L324P_Y	L4
7	IO_L325N_YY	J1
7	IO_L325P_YY	L5
7	IO_L326N_YY	J2
7	IO_VREF_L326P_YY	K3
7	IO_L327N_Y	L7
7	IO_L327P_Y	J3
7	IO_L328N_Y	M9[5]
7	IO_L328P_Y	H2[4]
7	IO_L329N_Y	J4
7	IO_VREF_L329P_Y	K6[2]
7	IO_L330N_YY	L8
7	IO_L330P_YY	G2
7	IO_L331N_YY	H3[5]
7	IO_L331P_YY	K7[4]
7	IO_L332N_YY	G3
7	IO_VREF_L332P_YY	J5
7	IO_L333N_Y	L9
7	IO_L333P_Y	H5
7	IO_L334N_Y	J6[5]
7	IO_L334P_Y	H4[4]
7	IO_L335N_Y	G4
7	IO_L335P_Y	K8
7	IO_L336N_YY	J7
7	IO_L336P_YY	F2
7	IO_L337N_YY	F3[5]
7	IO_L337P_YY	L10[4]
7	IO_L338N_Y	E1
7	IO_VREF_L338P_Y_Y	H6
7	IO_L339N_Y	G5
7	IO_L339P_Y	E2
7	IO_L340N	K9
7	IO_L340P	D1
7	IO_L341N_Y	E3

Table 28: **FG1156 — XCV1000E, XCV1600E, XCV2000E, XCV2600E, XCV3200E**

Bank	Pin Description	Pin #
7	IO_VREF_L341P_Y	J8
7	IO_L342N_Y	E4
7	IO_L342P_Y	D2
7	IO_L343N_Y	F4
7	IO_L343P_Y	D3
2	CCLK	C31
3	DONE	AM31
NA	DXN	AJ5
NA	DXP	AL5
NA	M0	AK4
NA	M1	AG7
NA	M2	AL3
NA	PROGRAM	AG28
NA	TCK	D5
NA	TDI	C30
2	TDO	K26
NA	TMS	C4
NA	VCCINT	K10
NA	VCCINT	K17
NA	VCCINT	K18
NA	VCCINT	K25
NA	VCCINT	L11
NA	VCCINT	L24
NA	VCCINT	M12
NA	VCCINT	M23
NA	VCCINT	N13
NA	VCCINT	N14
NA	VCCINT	N15
NA	VCCINT	N16
NA	VCCINT	N19
NA	VCCINT	N20
NA	VCCINT	N21

Table 28: **FG1156 — XCV1000E, XCV1600E, XCV2000E, XCV2600E, XCV3200E**

Bank	Pin Description	Pin #
NA	VCCINT	N22
NA	VCCINT	P13
NA	VCCINT	P22
NA	VCCINT	R13
NA	VCCINT	R22
NA	VCCINT	T13
NA	VCCINT	T22
NA	VCCINT	U10
NA	VCCINT	U25
NA	VCCINT	V10
NA	VCCINT	V25
NA	VCCINT	W13
NA	VCCINT	W22
NA	VCCINT	Y13
NA	VCCINT	Y22
NA	VCCINT	AA13
NA	VCCINT	AA22
NA	VCCINT	AB13
NA	VCCINT	AB14
NA	VCCINT	AB15
NA	VCCINT	AB16
NA	VCCINT	AB19
NA	VCCINT	AB20
NA	VCCINT	AB21
NA	VCCINT	AB22
NA	VCCINT	AC12
NA	VCCINT	AC23
NA	VCCINT	AD24
NA	VCCINT	AD11
NA	VCCINT	AE10
NA	VCCINT	AE17
NA	VCCINT	AE18
NA	VCCINT	AE25

Table 28: **FG1156 — XCV1000E, XCV1600E, XCV2000E, XCV2600E, XCV3200E**

Bank	Pin Description	Pin #
NA	VCCO_0	M17
NA	VCCO_0	L17
NA	VCCO_0	L16
NA	VCCO_0	E10
NA	VCCO_0	C14
NA	VCCO_0	A6
NA	VCCO_0	M13
NA	VCCO_0	M14
NA	VCCO_0	M15
NA	VCCO_0	M16
NA	VCCO_0	L12
NA	VCCO_0	L13
NA	VCCO_0	L14
NA	VCCO_0	L15
NA	VCCO_1	M18
NA	VCCO_1	L18
NA	VCCO_1	L23
NA	VCCO_1	E25
NA	VCCO_1	C21
NA	VCCO_1	A29
NA	VCCO_1	M19
NA	VCCO_1	M20
NA	VCCO_1	M21
NA	VCCO_1	M22
NA	VCCO_1	L19
NA	VCCO_1	L20
NA	VCCO_1	L21
NA	VCCO_1	L22
NA	VCCO_2	U24
NA	VCCO_2	U23
NA	VCCO_2	N24
NA	VCCO_2	M24
NA	VCCO_2	K30
NA	VCCO_2	F34

Table 28: **FG1156 — XCV1000E, XCV1600E, XCV2000E, XCV2600E, XCV3200E**

Bank	Pin Description	Pin #
NA	VCCO_2	T23
NA	VCCO_2	T24
NA	VCCO_2	R23
NA	VCCO_2	R24
NA	VCCO_2	P23
NA	VCCO_2	P24
NA	VCCO_2	P32
NA	VCCO_2	N23
NA	VCCO_3	V23
NA	VCCO_3	V24
NA	VCCO_3	Y23
NA	VCCO_3	Y24
NA	VCCO_3	W23
NA	VCCO_3	W24
NA	VCCO_3	AJ34
NA	VCCO_3	AE30
NA	VCCO_3	AC24
NA	VCCO_3	AB23
NA	VCCO_3	AB24
NA	VCCO_3	AA23
NA	VCCO_3	AA24
NA	VCCO_3	AA32
NA	VCCO_4	AD18
NA	VCCO_4	AC18
NA	VCCO_4	AC19
NA	VCCO_4	AC20
NA	VCCO_4	AC21
NA	VCCO_4	AC22
NA	VCCO_4	AP29
NA	VCCO_4	AM21
NA	VCCO_4	AK25
NA	VCCO_4	AD19
NA	VCCO_4	AD20
NA	VCCO_4	AD21

Table 28: **FG1156 — XCV1000E, XCV1600E, XCV2000E, XCV2600E, XCV3200E**

Bank	Pin Description	Pin #
NA	VCCO_4	AD22
NA	VCCO_4	AD23
NA	VCCO_5	AC17
NA	VCCO_5	AD17
NA	VCCO_5	AC13
NA	VCCO_5	AC14
NA	VCCO_5	AC15
NA	VCCO_5	AC16
NA	VCCO_5	AP6
NA	VCCO_5	AM14
NA	VCCO_5	AK10
NA	VCCO_5	AD12
NA	VCCO_5	AD13
NA	VCCO_5	AD14
NA	VCCO_5	AD15
NA	VCCO_5	AD16
NA	VCCO_6	V11
NA	VCCO_6	V12
NA	VCCO_6	Y11
NA	VCCO_6	Y12
NA	VCCO_6	W11
NA	VCCO_6	W12
NA	VCCO_6	AJ1
NA	VCCO_6	AE5
NA	VCCO_6	AC11
NA	VCCO_6	AB11
NA	VCCO_6	AB12
NA	VCCO_6	AA3
NA	VCCO_6	AA11
NA	VCCO_6	AA12
NA	VCCO_7	U11
NA	VCCO_7	U12
NA	VCCO_7	N12
NA	VCCO_7	M11

Table 28: **FG1156 — XCV1000E, XCV1600E, XCV2000E, XCV2600E, XCV3200E**

Bank	Pin Description	Pin #
NA	VCCO_7	K5
NA	VCCO_7	F1
NA	VCCO_7	T11
NA	VCCO_7	T12
NA	VCCO_7	R11
NA	VCCO_7	R12
NA	VCCO_7	P3
NA	VCCO_7	P11
NA	VCCO_7	P12
NA	VCCO_7	N11
NA	GND	K32
NA	GND	R4
NA	GND	AN1
NA	GND	AM11
NA	GND	AK5
NA	GND	AH28
NA	GND	AD32
NA	GND	AA20
NA	GND	Y20
NA	GND	W19
NA	GND	V19
NA	GND	U20
NA	GND	T20
NA	GND	R19
NA	GND	P19
NA	GND	H8
NA	GND	F12
NA	GND	C2
NA	GND	B1
NA	GND	A7
NA	GND	AP1
NA	GND	AN2
NA	GND	AM15

Table 28: **FG1156 — XCV1000E, XCV1600E, XCV2000E, XCV2600E, XCV3200E**

Bank	Pin Description	Pin #
NA	GND	AK17
NA	GND	AH34
NA	GND	AC6
NA	GND	AA21
NA	GND	Y21
NA	GND	W20
NA	GND	V20
NA	GND	U21
NA	GND	T21
NA	GND	R20
NA	GND	P20
NA	GND	H16
NA	GND	F23
NA	GND	C3
NA	GND	B2
NA	GND	A28
NA	GND	AP34
NA	GND	AM3
NA	GND	AL31
NA	GND	AH7
NA	GND	AD3
NA	GND	AA19
NA	GND	Y19
NA	GND	W18
NA	GND	V18
NA	GND	U19
NA	GND	T19
NA	GND	R18
NA	GND	P18
NA	GND	J26
NA	GND	F6
NA	GND	C1
NA	GND	C34
NA	GND	A3

Table 28: **FG1156 — XCV1000E, XCV1600E, XCV2000E, XCV2600E, XCV3200E**

Bank	Pin Description	Pin #
NA	GND	AP2
NA	GND	AN3
NA	GND	AM20
NA	GND	AK30
NA	GND	AG8
NA	GND	AC29
NA	GND	Y3
NA	GND	Y32
NA	GND	W21
NA	GND	V21
NA	GND	T8
NA	GND	T27
NA	GND	R21
NA	GND	P21
NA	GND	H19
NA	GND	F29
NA	GND	C11
NA	GND	B3
NA	GND	A32
NA	GND	AP3
NA	GND	AN32
NA	GND	AM24
NA	GND	AJ6
NA	GND	AG16
NA	GND	AA14
NA	GND	Y14
NA	GND	W8
NA	GND	W27
NA	GND	U14
NA	GND	T14
NA	GND	R3
NA	GND	R32
NA	GND	M6
NA	GND	H27

Table 28: **FG1156 — XCV1000E, XCV1600E, XCV2000E, XCV2600E, XCV3200E**

Bank	Pin Description	Pin #
NA	GND	E5
NA	GND	C15
NA	GND	B32
NA	GND	A33
NA	GND	AP7
NA	GND	AN33
NA	GND	AM32
NA	GND	AJ12
NA	GND	AG19
NA	GND	AA15
NA	GND	Y15
NA	GND	W14
NA	GND	V14
NA	GND	U15
NA	GND	T15
NA	GND	R14
NA	GND	P14
NA	GND	M29
NA	GND	G1
NA	GND	E18
NA	GND	C20
NA	GND	B33
NA	GND	A34
NA	GND	AP28
NA	GND	AN34
NA	GND	AM33
NA	GND	AJ23
NA	GND	AG27
NA	GND	AA16
NA	GND	Y16
NA	GND	W15
NA	GND	V15
NA	GND	U16
NA	GND	T16

Table 28: **FG1156 — XCV1000E, XCV1600E, XCV2000E, XCV2600E, XCV3200E**

Bank	Pin Description	Pin #
NA	GND	R15
NA	GND	P15
NA	GND	L3
NA	GND	G7
NA	GND	E30
NA	GND	C24
NA	GND	B34
NA	GND	AP32
NA	GND	AM1
NA	GND	AM34
NA	GND	AJ29
NA	GND	AF9
NA	GND	AA17
NA	GND	Y17
NA	GND	W16
NA	GND	V16
NA	GND	U17
NA	GND	T17
NA	GND	R16
NA	GND	P16
NA	GND	L32
NA	GND	G28
NA	GND	D4
NA	GND	C32
NA	GND	A1
NA	GND	AP33
NA	GND	AM2
NA	GND	AL4
NA	GND	AH1
NA	GND	AF26
NA	GND	AA18
NA	GND	Y18
NA	GND	W17
NA	GND	V17

Table 28: **FG1156 — XCV1000E, XCV1600E, XCV2000E, XCV2600E, XCV3200E**

Bank	Pin Description	Pin #
NA	GND	U18
NA	GND	T18
NA	GND	R17
NA	GND	P17
NA	GND	J9
NA	GND	G34
NA	GND	D31
NA	GND	C33
NA	GND	A2
NA	GND	AB17
NA	GND	AB18
NA	GND	N17
NA	GND	N18
NA	GND	U13
NA	GND	V13
NA	GND	U22
NA	GND	V22

Notes:

1. V_{REF} or I/O option only in the XCV1600E, XCV2000E, XCV2600E, and XCV3200E; otherwise, I/O option only.
2. V_{REF} or I/O option only in the XCV2000E, XCV2600E, and XCV3200E; otherwise, I/O option only.
3. No Connect in the XCV1000E, XCV1600E.
4. No Connect in the XCV1000E.
5. I/O in the XCV1000E.

FG1156 Differential Pin Pairs

Virtex-E devices have differential pin pairs that can also provide other functions when not used as a differential pair. The AO column in Table 29 indicates which devices in this package can use the pin pair as an asynchronous output. The "Other Functions" column indicates alternative function(s) that are not available when the pair is used as a differential pair or differential clock.

Table 29: **FG1156 Differential Pin Pair Summary: XCV1000E, XCV1600E, XCV2000E, XCV2600E, XCV3200E**

Pair	Bank	P Pin	N Pin	AO	Other Functions
GCLK LVDS					
3	0	E17	C17	NA	IO_DLL_L 42N
2	1	D17	J18	NA	IO_DLL_L 42P
1	5	AL19	AL17	NA	IO_DLL_L 215N
0	4	AH18	AM18	NA	IO_DLL_L 215P
IO LVDS Total Pairs: 344, Asynchronous Output Pairs: 134					
0	0	H9	F7	3200 1600 1000	-
1	0	J10	C5	3200 2000 1000	-
2	0	D6	E6	3200 2000 1000	VREF
3	0	G8	A4	3200 2600 1000	-
4	0	J11	C6	3200 2600 2000 1600 1000	-
5	0	F8	G9	3200 2600 2000 1600 1000	VREF
6	0	H10	A5	2000 1600	-
7	0	B5	D7	3200 1000	-
8	0	E8	K12	3200 1000	-
9	0	F9	B6	3200 2600	-
10	0	C7	G10	3200 2600 2000 1600 1000	-
11	0	B7	D8	3200 2600 2000 1600 1000	VREF
12	0	C8	H11	3200 1600	-

Table 29: **FG1156 Differential Pin Pair Summary: XCV1000E, XCV1600E, XCV2000E, XCV2600E, XCV3200E**

Pair	Bank	P Pin	N Pin	AO	Other Functions
13	0	B8	E9	3200 2000 1000	-
14	0	G11	K13	3200 2000 1000	VREF
15	0	F10	A8	3200 2600	-
16	0	H12	C9	3200 2600 2000 1600 1000	-
17	0	A9	D10	3200 2600 2000 1600 1000	VREF
18	0	A10	F11	2600 1600 1000	-
19	0	C10	K14	2600 1600 1000	-
20	0	G12	H13	3200 2600 2000 1600 1000	VREF
21	0	B11	A11	3200 2600 2000 1600 1000	-
22	0	D11	E12	3200 1600 1000	-
23	0	C12	G13	3200 2000 1000	-
24	0	A12	K15	3200 2000 1000	-
25	0	H14	B12	3200 2600 1000	-
26	0	F13	D12	3200 2600 2000 1600 1000	-
27	0	B13	A13	3200 2600 2000 1600 1000	VREF
28	0	G14	J15	2000 1600	-
29	0	F14	C13	3200 2600 1000	-
30	0	D13	H15	3200 2600 1000	-
31	0	K16	A14	3200	-

Table 29: **FG1156 Differential Pin Pair Summary: XCV1000E, XCV1600E, XCV2000E, XCV2600E, XCV3200E**

Pair	Bank	P Pin	N Pin	AO	Other Functions
32	0	B14	E14	3200 2600 2000 1600 1000	-
33	0	D14	G15	3200 2600 2000 1600 1000	VREF
34	0	D15	J16	3200 1600	-
35	0	B15	F15	3200 2000 1000	-
36	0	E15	A15	3200 2000 1000	-
37	0	A16	G16	3200 2600	-
38	0	J17	F16	3200 2600 2000 1600 1000	-
39	0	B16	C16	3200 2600 2000 1600 1000	VREF
40	0	A17	H17	2600 1600 1000	-
41	0	B17	G17	2600 1600 1000	VREF
42	1	J18	C17	None	IO_LVDS_DLL
43	1	C18	G18	2600 1600 1000	VREF
44	1	F18	H18	2600 1600 1000	-
45	1	A19	B19	3200 2600 2000 1600 1000	VREF
46	1	C19	K19	3200 2600 2000 1600 1000	-
47	1	E19	F19	3200 2600	-
48	1	J19	G19	3200 2000 1000	-
49	1	G20	A20	3200 2000 1000	-
50	1	F20	B20	3200 1600	-
51	1	E20	D20	3200 2600 2000 1600 1000	VREF

Table 29: **FG1156 Differential Pin Pair Summary: XCV1000E, XCV1600E, XCV2000E, XCV2600E, XCV3200E**

Pair	Bank	P Pin	N Pin	AO	Other Functions
52	1	A21	H20	3200 2600 2000 1600 1000	-
53	1	J20	E21	3200	-
54	1	K20	D21	3200 2600 1000	-
55	1	H21	B21	3200 2600 1000	-
56	1	F21	G21	2000 1600	-
57	1	B22	A22	3200 2600 2000 1600 1000	VREF
58	1	C22	J21	3200 2600 2000 1600 1000	-
59	1	G22	D22	3200 2600 1000	-
60	1	A23	K21	3200 2000 1000	-
61	1	B23	F22	3200 2000 1000	-
62	1	H22	C23	3200 1600 1000	-
63	1	K22	D23	3200 2600 2000 1600 1000	-
64	1	J22	A24	3200 2600 2000 1600 1000	VREF
65	1	D24	H23	2600 1600 1000	-
66	1	E24	A25	2600 1600 1000	-
67	1	C25	A26	3200 2600 2000 1600 1000	VREF
68	1	B26	F24	3200 2600 2000 1600 1000	-
69	1	F25	K23	3200 2600	-
70	1	H24	C26	3200 2000 1000	VREF

Table 29: **FG1156 Differential Pin Pair Summary: XCV1000E, XCV1600E, XCV2000E, XCV2600E, XCV3200E**

Pair	Bank	P Pin	N Pin	AO	Other Functions
71	1	A27	G24	3200 2000 1000	-
72	1	G25	B27	3200 1600	-
73	1	C27	E26	3200 2600 2000 1600 1000	VREF
74	1	B28	J24	3200 2600 2000 1600 1000	-
75	1	H25	K24	3200 2600	-
76	1	F26	D27	3200 1000	-
77	1	C28	G26	3200 1000	-
78	1	J25	E27	2000 1600	-
79	1	H26	A30	3200 2600 2000 1600 1000	VREF
80	1	B29	G27	3200 2600 2000 1600 1000	-
81	1	C29	F27	3200 2600 1000	-
82	1	F28	E28	3200 2000 1000	VREF
83	1	B30	L25	3200 2000 1000	-
84	1	E29	B31	3200 1600 1000	-
85	1	D30	A31	3200 2600 2000 1600 1000	CS
86	2	D32	J27	3200 2600 2000 1600 1000	DIN, D0
87	2	E31	F30	3200 2600 2000	-
88	2	G29	F32	2600 2000 1000	-
89	2	E32	G30	3200 2600 1600 1000	VREF
90	2	M25	G31	2600 1600	-

Table 29: **FG1156 Differential Pin Pair Summary: XCV1000E, XCV1600E, XCV2000E, XCV2600E, XCV3200E**

Pair	Bank	P Pin	N Pin	AO	Other Functions
91	2	L26	D33	3200 2600 1600 1000	-
92	2	D34	H29	2600 2000 1000	VREF
93	2	J28	E33	3200 2600 2000 1600	-
94	2	H28	H30	3200 2600 2000 1600 1000	-
95	2	H32	K28	3200 2600 1600 1000	-
96	2	L27	F33	3200 2600 2000	-
97	2	M26	E34	2600 2000 1000	-
98	2	H31	G32	3200 2600 2000 1600 1000	VREF
99	2	N25	J31	2000 1600	-
100	2	J30	G33	3200 2600 2000 1600 1000	-
101	2	H34	J29	2600 1000	VREF
102	2	M27	H33	3200 2600 1600	-
103	2	K29	J34	3200 2600 1600 1000	-
104	2	L29	J33	3200 2600 2000 1600 1000	VREF
105	2	M28	K34	3200 2600 2000 1600 1000	-
106	2	N27	L34	3200 1600 1000	-
107	2	K33	P26	2000 1600 1000	D1
108	2	R25	M34	3200 2600 2000	-
109	2	L31	L33	2000 1000	-
110	2	P27	M33	3200 2600 1600 1000	-

Table 29: **FG1156 Differential Pin Pair Summary: XCV1000E, XCV1600E, XCV2000E, XCV2600E, XCV3200E**

Pair	Bank	P Pin	N Pin	AO	Other Functions
111	2	M31	R26	2600 1600	-
112	2	N30	P28	3200 1600 1000	-
113	2	N29	N33	2600 2000 1000	VREF
114	2	T25	N34	3200 2600 2000 1600	-
115	2	P34	R27	3200 2600 2000 1600 1000	-
116	2	P29	P31	3200 2600 1600 1000	-
117	2	P33	T26	3200 2600 2000	-
118	2	R34	R28	2600 2000 1000	-
119	2	N31	N32	2000 1600 1000	D3
120	2	P30	R33	2000 1600	-
121	2	R29	T34	3200 2600 2000 1600 1000	-
122	2	R30	T30	1000	-
123	2	T28	R31	3200 1600	-
124	2	T29	U27	3200 2600 1600 1000	-
125	2	T31	T33	2000 1600 1000	VREF
126	2	U28	T32	2000 1600 1000	-
127	2	U29	U33	3200 2600 1600 1000	VREF
128	2	V33	U31	3200 2600 2000 1600 1000	-
129	3	V26	V30	3200 2600 1600 1000	VREF
130	3	W34	V28	2000 1600 1000	-
131	3	W32	W30	2000 1600 1000	VREF

Table 29: **FG1156 Differential Pin Pair Summary: XCV1000E, XCV1600E, XCV2000E, XCV2600E, XCV3200E**

Pair	Bank	P Pin	N Pin	AO	Other Functions
132	3	V29	Y34	3200 2600 1600 1000	-
133	3	W29	Y33	3200 1600	-
134	3	W26	W28	1000	-
135	3	Y31	Y30	3200 2600 2000 1600 1000	-
136	3	AA34	W31	2000 1600	-
137	3	AA33	Y29	2000 1600 1000	VREF
138	3	W25	AB34	2600 2000 1000	-
139	3	Y28	AB33	3200 2600 2000	-
140	3	AA30	Y26	3200 2600 1600 1000	-
141	3	Y27	AA31	3200 2600 2000 1600 1000	-
142	3	AA27	AA29	3200 2600 2000 1600	-
143	3	AB32	AB29	2600 2000 1000	VREF
144	3	AA28	AC34	3200 1600 1000	-
145	3	Y25	AD34	2600 1600	-
146	3	AB30	AC33	3200 2600 1600 1000	-
147	3	AA26	AC32	2000 1000	-
148	3	AD33	AB28	3200 2600 2000	-
149	3	AE34	AB27	3200 2600 2000 1600 1000	D5
150	3	AE33	AC30	2000 1600 1000	VREF
151	3	AA25	AE32	3200 1600 1000	-
152	3	AE31	AD29	3200 2600 2000 1600 1000	-

Table 29: **FG1156 Differential Pin Pair Summary: XCV1000E, XCV1600E, XCV2000E, XCV2600E, XCV3200E**

Pair	Bank	P Pin	N Pin	AO	Other Functions
153	3	AD31	AF33	3200 2600 2000 1600 1000	VREF
154	3	AC28	AF31	3200 2600 1600 1000	-
155	3	AC27	AF32	3200 2600 1600	-
156	3	AE29	AD28	2600 1000	VREF
157	3	AD30	AG32	3200 2600 2000 1600 1000	-
158	3	AC26	AH33	2000 1600	-
159	3	AD26	AF30	3200 2600 2000 1600 1000	VREF
160	3	AC25	AH32	2600 2000 1000	-
161	3	AE28	AL34	3200 2600 2000	-
162	3	AG30	AD27	3200 2600 1600 1000	-
163	3	AF29	AK34	3200 2600 2000 1600 1000	-
164	3	AD25	AE27	3200 2600 2000 1600	-
165	3	AJ33	AH31	2600 2000 1000	VREF
166	3	AE26	AL33	3200 2600 1600 1000	-
167	3	AF28	AL32	2600 1600	-
168	3	AJ31	AF27	3200 2600 1600 1000	VREF
169	3	AG29	AJ32	2600 2000 1000	-
170	3	AK33	AH30	3200 2600 2000	-
171	3	AK32	AK31	3200 2600 2000 1600 1000	INIT

Table 29: **FG1156 Differential Pin Pair Summary: XCV1000E, XCV1600E, XCV2000E, XCV2600E, XCV3200E**

Pair	Bank	P Pin	N Pin	AO	Other Functions
172	4	AP31	AK29	3200 2600 2000 1600 1000	-
173	4	AP30	AN31	3200 1600 1000	-
174	4	AH27	AN30	3200 2000 1000	-
175	4	AM30	AK28	3200 2000 1000	VREF
176	4	AG26	AN29	3200 2600 1000	-
177	4	AF25	AM29	3200 2600 2000 1600 1000	-
178	4	AL29	AL28	3200 2600 2000 1600 1000	VREF
179	4	AE24	AN28	2000 1600	-
180	4	AJ27	AH26	3200 1000	-
181	4	AG25	AK27	3200 1000	-
182	4	AM28	AF24	3200 2600	-
183	4	AJ26	AP27	3200 2600 2000 1600 1000	-
184	4	AK26	AN27	3200 2600 2000 1600 1000	VREF
185	4	AE23	AM27	3200 1600	-
186	4	AL26	AP26	3200 2000 1000	-
187	4	AN26	AJ25	3200 2000 1000	VREF
188	4	AG24	AP25	3200 2600	-
189	4	AF23	AM26	3200 2600 2000 1600 1000	-
190	4	AJ24	AN25	3200 2600 2000 1600 1000	VREF
191	4	AE22	AM25	2600 1600 1000	-

Table 29: **FG1156 Differential Pin Pair Summary: XCV1000E, XCV1600E, XCV2000E, XCV2600E, XCV3200E**

Pair	Bank	P Pin	N Pin	AO	Other Functions
192	4	AK24	AH23	2600 1600 1000	-
193	4	AF22	AP24	3200 2600 2000 1600 1000	VREF
194	4	AL24	AK23	3200 2600 2000 1600 1000	-
195	4	AG22	AN23	3200 1600 1000	-
196	4	AP23	AM23	3200 2000 1000	-
197	4	AH22	AP22	3200 2000 1000	-
198	4	AL23	AF21	3200 2600 1000	-
199	4	AL22	AJ22	3200 2600 2000 1600 1000	-
200	4	AK22	AM22	3200 2600 2000 1600 1000	VREF
201	4	AG21	AJ21	2000 1600	-
202	4	AP21	AE20	3200 2600 1000	-
203	4	AH21	AL21	3200 2600 1000	-
204	4	AN21	AF20	3200	-
205	4	AK21	AP20	3200 2600 2000 1600 1000	-
206	4	AE19	AN20	3200 2600 2000 1600 1000	VREF
207	4	AG20	AL20	3200 1600	-
208	4	AH20	AK20	3200 2000 1000	-
209	4	AN19	AJ20	3200 2000 1000	-
210	4	AF19	AP19	3200 2600	-

Table 29: **FG1156 Differential Pin Pair Summary: XCV1000E, XCV1600E, XCV2000E, XCV2600E, XCV3200E**

Pair	Bank	P Pin	N Pin	AO	Other Functions
211	4	AM19	AH19	3200 2600 2000 1600 1000	-
212	4	AJ19	AP18	3200 2600 2000 1600 1000	VREF
213	4	AF18	AP17	2600 1600 1000	-
214	4	AJ18	AL18	2600 1600 1000	VREF
215	5	AM18	AL17	None	IO_LVDS_DLL
216	5	AH17	AM17	2600 1600 1000	VREF
217	5	AJ17	AG17	2600 1600 1000	-
218	5	AP16	AL16	3200 2600 2000 1600 1000	VREF
219	5	AJ16	AM16	3200 2600 2000 1600 1000	-
220	5	AK16	AP15	3200 2600	-
221	5	AL15	AH16	3200 2000 1000	-
222	5	AN15	AF16	3200 2000 1000	-
223	5	AP14	AE16	3200 1600	-
224	5	AK15	AJ15	3200 2600 2000 1600 1000	VREF
225	5	AH15	AN14	3200 2600 2000 1600 1000	-
226	5	AK14	AG15	3200	-
227	5	AM13	AF15	3200 2600 1000	-
228	5	AG14	AP13	3200 2600 1000	-
229	5	AE14	AE15	2000 1600	-
230	5	AN13	AG13	3200 2600 2000 1600 1000	VREF

Table 29: **FG1156 Differential Pin Pair Summary: XCV1000E, XCV1600E, XCV2000E, XCV2600E, XCV3200E**

Pair	Bank	P Pin	N Pin	AO	Other Functions
231	5	AH14	AP12	3200 2600 2000 1600 1000	-
232	5	AJ14	AL14	3200 2600 1000	-
233	5	AF13	AN12	3200 2000 1000	-
234	5	AF14	AP11	3200 2000 1000	-
235	5	AN11	AH13	3200 1600 1000	-
236	5	AM12	AL12	3200 2600 2000 1600 1000	-
237	5	AJ13	AP10	3200 2600 2000 1600 1000	VREF
238	5	AK12	AM10	2600 1600 1000	-
239	5	AP9	AK11	2600 1600 1000	-
240	5	AL11	AL10	3200 2600 2000 1600 1000	VREF
241	5	AE13	AM9	3200 2600 2000 1600 1000	-
242	5	AF12	AP8	3200 2600	-
243	5	AL9	AH11	3200 2000 1000	VREF
244	5	AF11	AN8	3200 2000 1000	-
245	5	AM8	AG11	3200 1600	-
246	5	AL8	AK9	3200 2600 2000 1600 1000	VREF
247	5	AH10	AN7	3200 2600 2000 1600 1000	-
248	5	AE12	AJ9	3200 2600	-
249	5	AM7	AL7	3200 1000	-
250	5	AG10	AN6	3200 1000	-

Table 29: **FG1156 Differential Pin Pair Summary: XCV1000E, XCV1600E, XCV2000E, XCV2600E, XCV3200E**

Pair	Bank	P Pin	N Pin	AO	Other Functions
251	5	AK8	AH9	2000 1600	-
252	5	AP5	AJ8	3200 2600 2000 1600 1000	VREF
253	5	AE11	AN5	3200 2600 2000 1600 1000	-
254	5	AF10	AM6	3200 2600 1000	-
255	5	AL6	AG9	3200 2000 1000	VREF
256	5	AH8	AP4	3200 2000 1000	-
257	5	AN4	AJ7	3200 1600 1000	-
258	5	AM5	AK6	3200 2600 2000 1600 1000	-
259	6	AF8	AH6	3200 2600 2000 1600 1000	-
260	6	AK3	AE9	3200 2600 2000	-
261	6	AL2	AD10	2600 2000 1000	-
262	6	AH4	AL1	3200 2600 1600 1000	VREF
263	6	AK1	AG6	2600 1600	-
264	6	AK2	AF7	3200 2600 1600 1000	-
265	6	AG5	AJ3	2600 2000 1000	VREF
266	6	AJ2	AD9	3200 2600 2000 1600	-
267	6	AH2	AC10	3200 2600 2000 1600 1000	-
268	6	AF5	AH3	3200 2600 1600 1000	-
269	6	AG3	AE8	3200 2600 2000	-

Table 29: **FG1156 Differential Pin Pair Summary: XCV1000E, XCV1600E, XCV2000E, XCV2600E, XCV3200E**

Pair	Bank	P Pin	N Pin	AO	Other Functions
270	6	AG2	AE7	2600 2000 1000	-
271	6	AG1	AF6	3200 2600 2000 1600 1000	VREF
272	6	AG4	AC9	2000 1600	-
273	6	AF3	AE6	3200 2600 2000 1600 1000	-
274	6	AF4	AF1	2600 1000	VREF
275	6	AF2	AB10	3200 2600 1600	-
276	6	AE1	AC8	3200 2600 1600 1000	-
277	6	AE3	AD5	3200 2600 2000 1600 1000	VREF
278	6	AD1	AC7	3200 2600 2000 1600 1000	-
279	6	AD2	AD6	3200 1600 1000	-
280	6	AC1	AB8	2000 1600 1000	VREF
281	6	AC2	AC5	3200 2600 2000 1600 1000	-
282	6	AC3	AA9	3200 2600 2000	-
283	6	AD4	AC4	2000 1000	-
284	6	AB6	AA8	3200 2600 1600 1000	-
285	6	Y10	AB1	2600 1600	-
286	6	AA7	AB2	3200 1600 1000	-
287	6	AA1	AA4	2600 2000 1000	VREF
288	6	AB4	Y9	3200 2600 2000 1600	-
289	6	Y8	AA2	3200 2600 2000 1600 1000	-

Table 29: **FG1156 Differential Pin Pair Summary: XCV1000E, XCV1600E, XCV2000E, XCV2600E, XCV3200E**

Pair	Bank	P Pin	N Pin	AO	Other Functions
290	6	AA5	AA6	3200 2600 1600 1000	-
291	6	Y7	AB3	3200 2600 2000	-
292	6	W10	Y1	2600 2000 1000	-
293	6	Y2	Y5	2000 1600 1000	VREF
294	6	W2	W9	2000 1600	-
295	6	Y4	W7	3200 2600 2000 1600 1000	-
296	6	Y6	W1	1000	-
297	6	W3	W6	3200 1600	-
298	6	W4	V9	3200 2600 1600 1000	-
299	6	V1	W5	2000 1600 1000	VREF
300	6	U2	V7	2000 1600 1000	-
301	6	U1	V6	3200 2600 1600 1000	VREF
302	7	U4	U9	3200 2600 2000 1600 1000	-
303	7	U5	U7	3200 2600 1600 1000	VREF
304	7	U6	U3	2000 1600 1000	-
305	7	T6	T3	2000 1600 1000	VREF
306	7	T4	T9	3200 2600 1600 1000	-
307	7	R1	T5	3200 1600	-
308	7	T10	R6	1000	-
309	7	R5	R2	3200 2600 2000 1600 1000	-
310	7	P5	P1	2000 1600 1000	VREF

Table 29: **FG1156 Differential Pin Pair Summary: XCV1000E, XCV1600E, XCV2000E, XCV2600E, XCV3200E**

Pair	Bank	P Pin	N Pin	AO	Other Functions
311	7	P2	R8	2600 2000 1000	-
312	7	N1	R9	3200 2600 2000	-
313	7	R10	P4	3200 2600 1600 1000	-
314	7	N2	P8	3200 2600 2000 1600 1000	-
315	7	P7	P6	3200 2600 2000 1600	-
316	7	N4	M1	2600 2000 1000	VREF
317	7	N3	N6	3200 1600 1000	-
318	7	M2	P9	2600 1600	-
319	7	M3	N7	3200 2600 1600 1000	-
320	7	M4	P10	2000 1000	-
321	7	N8	L1	3200 2600 2000	-
322	7	N9	L2	3200 2600 2000 1600 1000	-
323	7	K1	M7	2000 1600 1000	VREF
324	7	L4	M8	3200 1600 1000	-
325	7	L5	J1	3200 2600 2000 1600 1000	-
326	7	K3	J2	3200 2600 2000 1600 1000	VREF
327	7	J3	L7	3200 2600 1600 1000	-
328	7	H2	M9	3200 2600 1600	-
329	7	K6	J4	2600 1000	VREF
330	7	G2	L8	3200 2600 2000 1600 1000	-

Table 29: **FG1156 Differential Pin Pair Summary: XCV1000E, XCV1600E, XCV2000E, XCV2600E, XCV3200E**

Pair	Bank	P Pin	N Pin	AO	Other Functions
331	7	K7	H3	2000 1600	-
332	7	J5	G3	3200 2600 2000 1600 1000	VREF
333	7	H5	L9	2600 2000 1000	-
334	7	H4	J6	3200 2600 2000	-
335	7	K8	G4	3200 2600 1600 1000	-
336	7	F2	J7	3200 2600 2000 1600 1000	-
337	7	L10	F3	3200 2600 2000 1600	-
338	7	H6	E1	2600 2000 1000	VREF
339	7	E2	G5	3200 2600 1600 1000	-
340	7	D1	K9	2600 1600	-
341	7	J8	E3	3200 2600 1600 1000	VREF
342	7	D2	E4	2600 2000 1000	-
343	7	D3	F4	3200 2600 2000	-

Revision History

The following table shows the revision history for this document.

Date	Version	Revision
12/7/99	1.0	Initial Xilinx release.
1/10/00	1.1	Re-released with spd.txt v. 1.18, FG860/900/1156 package information, and additional DLL, Select RAM and SelectI/O information.
1/28/00	1.2	Added Delay Measurement Methodology table, updated SelectI/O section, Figures 30, 54, & 55, text explaining Table 5, T_{BYP} values, buffered Hex Line info, p. 8, I/O Timing Measurement notes, notes for Tables 15, 16, and corrected F1156 pinout table footnote references.
2/29/00	1.3	Updated pinout tables, V_{CC} page 20, and corrected Figure 20.
5/23/00	1.4	Correction to table on p. 22.
7/10/00	1.5	• Numerous minor edits. • Data sheet upgraded to Preliminary. • Preview -8 numbers added to **Virtex-E Electrical Characteristics** tables.
8/1/00	1.6	• Reformatted entire document to follow new style guidelines. • Changed speed grade values in tables on pages 35-37.
9/20/00	1.7	• Min values added to **Virtex-E Electrical Characteristics** tables. • XCV2600E and XCV3200E numbers added to **Virtex-E Electrical Characteristics** tables (Module 3). • Corrected user I/O count for XCV100E device in Table 1 (Module 1). • Changed several pins to “No Connect in the XCV100E“ and removed duplicate V_{CCINT} pins in Table ~ (Module 4). • Changed pin J10 to “No connect in XCV600E” in Table 74 (Module 4). • Changed pin J30 to “V_{REF} or I/O option only in the XCV600E” in Table 74 (Module 4). • Corrected pair 18 in Table 75 (Module 4) to be “AO in the XCV1000E, XCV1600E“.
11/20/00	1.8	• Upgraded speed grade -8 numbers in **Virtex-E Electrical Characteristics** tables to Preliminary. • Updated minimums in Table 13 and added notes to Table 14. • Added to note 2 to **Absolute Maximum Ratings**. • Changed speed grade -8 numbers for $T_{SHCKO32}$, T_{REG}, T_{BCCS}, and T_{ICKOF}. • Changed all minimum hold times to –0.4 under **Global Clock Set-Up and Hold for LVTTL Standard, with DLL**. • Revised maximum T_{DLLPW} in -6 speed grade for **DLL Timing Parameters**. • Changed GCLK0 to BA22 for FG860 package in Table 46.
2/12/01	1.9	• Revised footnote for Table 14. • Added numbers to **Virtex-E Electrical Characteristics** tables for XCV1000E and XCV2000E devices. • Updated Table 27 and Table 78 to include values for XCV400E and XCV600E devices. • Revised Table 62 to include pinout information for the XCV400E and XCV600E devices in the BG560 package. • Updated footnotes 1 and 2 for Table 76 to include XCV2600E and XCV3200E devices.

Date	Version	Revision
4/2/01	2.0	• Updated numerous values in **Virtex-E Switching Characteristics** tables. • Changed pinout table footnotes from "V_{REF} option only" to "V_{REF} or I/O option only" to improve clarity. • Converted file to modularized format. See the **Virtex-E Data Sheet** section.
7/26/01	2.1	• Changed pinout table footnotes from "V_{REF} or I/O option only" to "V_{REF} or I/O option only; otherwise I/O only" to improve clarity. • Changed designation for pin pair 300 in Table 29 from AO to footnote 9.
10/25/01	2.2	• Changed Table 29 to clarify which devices in the FG1156 package can use each pin pair as an asynchronous output. • Updated references to the XCV3200E device in the FG1156 package.
11/15/01	2.3	• Fixed cosmetic error.

Virtex-E Data Sheet

The Virtex-E Data Sheet contains the following modules:

- DS022-1, Virtex-E 1.8V FPGAs:
  Introduction and Ordering Information (Module 1)
- DS022-2, Virtex-E 1.8V FPGAs:
  Functional Description (Module 2)
- DS022-3, Virtex-E 1.8V FPGAs:
  DC and Switching Characteristics (Module 3)
- DS022-4, Virtex-E 1.8V FPGAs:
  Pinout Tables (Module 4)