VUVRF1
9/10/92 GR

VME TRANSISTION DIAGRAM

RF CONTROL SYSTEMS

EQUIPMENT INTERFACE CONNECTORS

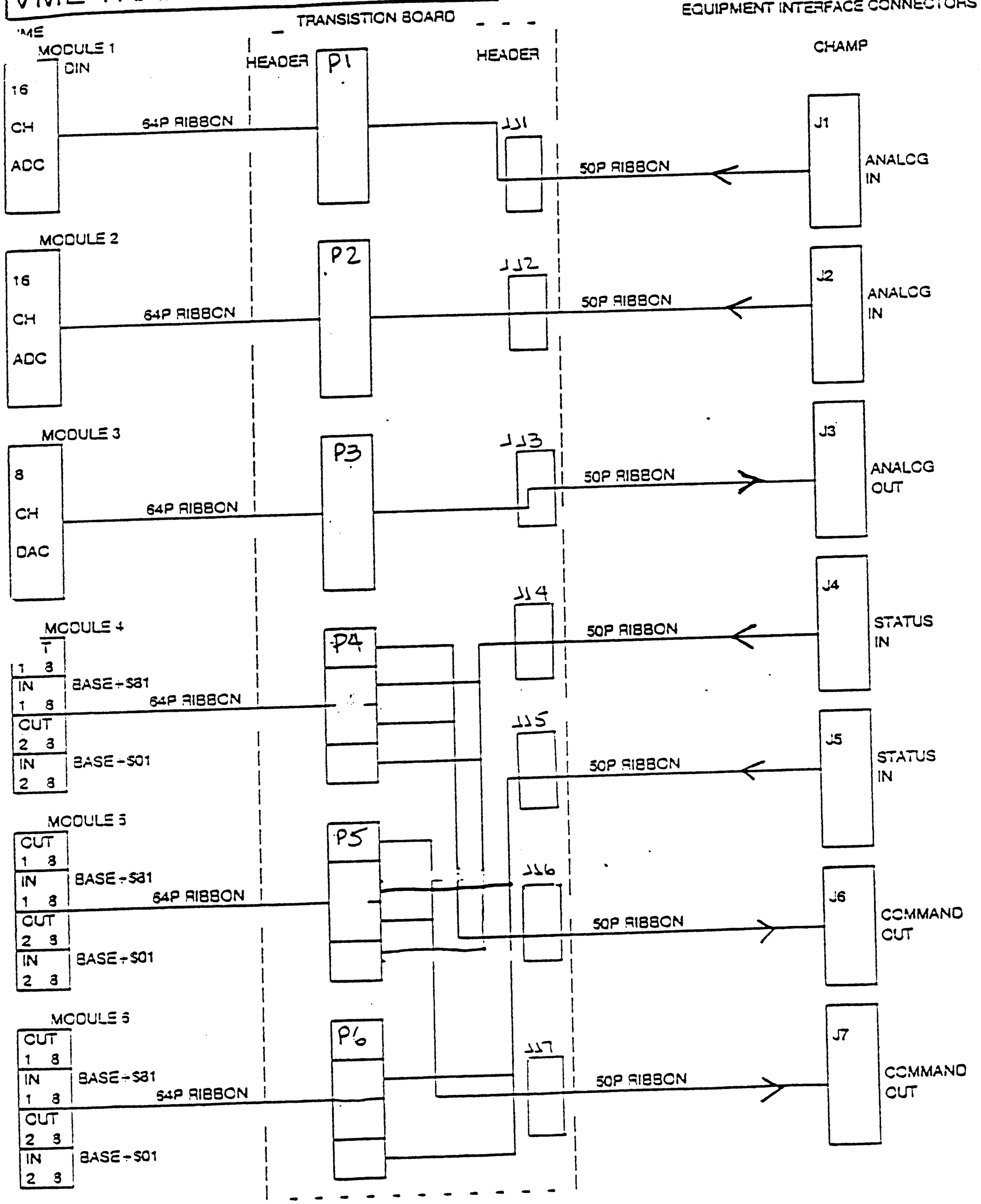

WIRING CONNECTIONS FOR RF CONTROL - VME

XRF4 VUVRF1

ADC #1 C	[redacted]	SIGNAL NAME [redacted]	BOARD EDGE	J1 PIN # (TRANSITION BOARD)	JJ1 PIN # (TRANSITION BOARD)	[redacted] CHAMPIN
0 +		DAC #0 RB (AutoTune Setpoint)	A32	P1 - 64	J1 - 1	1
-			A31	62	2	26
1 +		DAC #1 RB (Temp Setpoint)	C32	63	3	2
-		RET	C31	61	4	27
2 +	3KW	FILAMENT I	A29	58	5	3
-		RET	A28	56	6	28
3 +	3KW	GRID E	C29	57	7	4
-		RET	C28	55	8	29
4 +	3KW	GRID I	A26	52	9	5
-		RET	A25	50	10	30
5 +	3KW	PLATE E	C26	51	11	6
-		RET	C25	49	12	31
6 +	3KW	PLATE I	A23	46	13	7
-		RET	A22	44	14	32
7 +	3KW	SCREEN E	C23	45	15	8
-		RET	C22	43	16	33
8 +	3KW	SCREEN I	A20	40	17	9
-		RET	A19	38	18	34
9 +	3KW	FWD PWR	C20	39	19	10
-		RET	C19	37	20	35
10 +	3KW	REV PWR	A17	34	21	11
-		RET	A16	32	22	36
11 +		DAC #4	C17	33	23	12
-		RET	C16	31	24	37
12 +	50KW	FILAMENT I	A14	28	25	13
-		RET	A13	26	26	38
13 +		GRID E	C14	27	27	14
-		RET	C13	25	28	39
14 +		GRID I	A11	22	29	15
-		RET	A10	20	30	40
15 +		PLATE E	C11	21	31	16
-		RET	C10	19	32	41
	DRAIN		C08	15	JUMPER 50	JUMPER 50

ADC — BOARD #1

WIRING CONNECTIONS FOR RF CONTROL - VME

~~XRF4~~ VUVRF1

ADC #2 C		SIGNAL NAME	[redacted]	J2 PIN #	JJ2 PIN #	[redacted]
			BOARD EDGE	TRANSITION BOARD		CHAMP IN
0 +			A32	P2 - 64	J2 - 1	1
-			A31	62	2	26
1 +	50KW	PLATE I	C32	63	3	2
-		RET	C31	61	4	27
2 +		SCREEN E	A29	58	5	3
-		RET	A28	56	6	28
3 +		SCREEN I	C29	57	7	4
-		RET	C28	55	8	29
4 +		FWD PWR	A26	52	9	5
-		RET	A25	50	10	30
5 +		REV PWR	C26	51	11	6
-		RET	C25	49	12	31
6 +	CAV	CAVITY FIELD	A23	46	13	7
-		RET	A22	44	14	32
7 +	CAV	AUTO TUNE PH ERR	C23	45	15	8
-		RET	C22	43	16	33
8 +	CAV	AUTO TUNE PH RDB	A20	40	17	9
-		RET	A19	38	18	34
9 +		plunger Tuner Pos	C20	39	19	10
-		ret	C19	37	20	35
10 +	CAV	Loop TUNER POS	A17	34	21	11
-		RET	A16	32	22	36
11 +	CAV	INTER RING PH RDB	C17	33	23	12
-		RET	C16	31	24	37
12 +	CAV	INTER CAV PH RDBK	A14	28	25	13
-		RET	A13	25	[illegible]	[illegible]
13 +	CAV	CAVITY TEMP	C14	27	27	14
-		RET	C13	25	28	39
14 +		DAC #2 RB (interring phase setpoint)	A11	22	29	15
-		RET	A10	20	30	40
15 +		DAC #3 RB (RF Level setpoint)	C11	21	31	16
-		RET	C10	18	32	41
	DRAIN		C08	15	JUMPER 50	JUMPER 50

ADC - BOARD #2

WIRING CONNECTIONS FOR RF CONTROL - VME

XRF4 VUVRF1

DAC CHA	SIGNAL NAME	[redacted]	J3 PIN #	JU3 PIN #	[redacted]
		BOARD EDGE	TRANSITION BOARD		CHAMP IN
0 +	AUTO TUNE PH SPT	32A	P3 - 64	J3 - 1	1
-	RET	31A	62	2	26
1 +	Temp setpoint	32C	63	3	2
-		31C	61	4	27
2 +	INTER_ PH SPT	29A	58	5	3
-	RET	28A	56	6	28
3 +	RF LEVEL SPT	29C	57	7	4
-	RET	28C	55	8	29
4 +		26A	52	9	5
-		25A	50	10	30
5 +		26C	51	11	6
-		25C	49	12	31
6 +		23A	46	13	7
-		22A	44	14	32
7 +		23C	45	15	8
-		22C	43	16	33
	DRAIN	09C	17 - jumper -	50	JUMPER 50

BOARD #3 VUAP

WIRING CONNECTIONS FOR RF CONTROL - VME

XRF4 VUVRF1

BIT IN #1	[redacted]	SIGNAL NAME	[redacted]	JX PIN #	[redacted]	JJ4 PIN #	[redacted]

			Board Edge		Transition Board				Champ In
0 +	3KW	VCC	A32	P4	64	J4 - 2	GND		26
-		AIR	C32	PA0-1	63	1			1
1 +		VCC	A31		62	4	GND		27
-		U I FIL	C31	PA1-1	61	3			2
2 +		VCC	A30		60	6	GND		28
-		O I FIL	C30	PA2-1	59	5			3
3 +		VCC	A29		58	8	GND		29
-		E GRID	C29	PA3-1	57	7			4
4 +		VCC	A28		56	10	GND		30
-		I GRID	C28	PA4-1	55	9			5
5 +		VCC	A27		54	12	GND		31
-		H2O	C27	PA5-1	53	11			6
6 +		VCC	A26		52	14	GND		32
-		E PLATE	C26	PA6-1	51	13			7
7 +		VCC	A25		50	16	GND		33
-		I PLATE	C25	PA7-1	49	15			8
8 +		VCC	A16		32	18	GND		34
-		E SCREEN	C16	PA0-2	31	17			9
9 +		VCC	A15		30	20	GND		35
-		I SCREEN	C15	PA1-2	29	19			10
10 +		VCC	A14		28	22	GND		36
-	50KW	AIR	C14	PA2-2	27	21			11
11 +		VCC	A13		26	24	GND		37
-		H2O	C13	PA3-2	25	23			12
12 +		VCC	A12		24	26	GND		38
-		U I FIL	C12	PA4-2	23	25			13
13 +		VCC	A11		22	28	GND		39
-		O I FIL	C11	PA5-2	21	27			14
14 +		VCC	A10		20	30	GND		40
-		E GRID	C10	PA6-2	19	29			15
15 +		VCC	A09		18	32	GND		41
-		I GRID	C09	PA7-2	17	31			18
16 +		VCC	A32	P5	64	34	GND		42
-	HV DR	~~PWR SUP FLT~~	C32	PA0-1	63	33			17
17 +		VCC	A31		62	36	GND		43
-		CROWBAR	C31	PA1-1	61	35			18
18 +		VCC	A30		60	38	GND		44
-		E PLATE	C30	PA2-1	59	37			19
19 +		VCC	A29		58	40	GND		45
-		I PLATE	C29	PA3-1	57	39			20

Digital I/O - Board #4

Digital I/O - Board #5

WIRING CONNECTIONS FOR RF CONTROL - VME

XRF4 VUVRF1

BIT IN #1	[redacted]	SIGNAL NAME	[redacted]	JX PIN #	[redacted]	JJ4 PIN #	[redacted]
			BOARD EDGE	TRANSITION BOARD			CHAMP IN
20 +		VCC	A28	PS- 56	J4- 42	GND	46
-	50KW	E SCREEN	C28	PA4-1 55	41		21
21 +		VCC	A27	54	44	GND	47
-		I SCREEN	C27	PA5-1 53	43		22
22 +		VCC	A26	52	46	GND	48
-		I LINE	C26	PA6-1 51	45		23
23 +		VCC	A25	50	48	GND	49
-		CAVITY H2O	C25	PA7-1 49	47		24
				VCC	50	VCC	50
					49	JUMPER	25
		DRAIN	CHASSIS				

DIGITAL I/O - BOARD #5

WIRING CONNECTIONS FOR RF CONTROL

~~XRF4~~ VUVRF1

BIT IN #2		SIGNAL NAME	[redacted]	JX PIN #		JJ5 PIN #	[redacted]
			BOARD EDGE	TRANSITION BOARD			CHAMP IN
0 +	CAV	VCC	A16	P5 32		J5- 2	GND 26
-		CAVITY VACUUM	C16	PA0-2 31		1	1
1 +	CAV	VCC	A15	30		4	GND 27
-		PROBE H2O	C15	PA1-2 29		3	2
2 +		VCC	A14	28		6	GND 28
-	CAV	CAVITY TEMP	C14	PA2-2 27		5	3
3 +		VCC	A13	26		8	GND 29
-		RING SECURITY	C13	PA3-2 25		7	4
4 +		VCC	A12	24		10	GND 30
-	HARMONIC CAV. D H2O		C12	PA4-2 23		9	5
5 +		VCC	A11	22		12	GND 31
-		REV PWR TRIP	C11	PA5-2 21		11	6
6 +		VCC	A10	20		14	GND 32
-			C10	PA6-2 19		13	7
7 +		VCC	A09	18		16	GND 33
-			C09	PA7-2 17		15	8
8 +		VCC	A32	P6 - 64		J6 18	GND 34
-	CAV	LOOP UP LIMIT	C32	PA0-1 63		17	9
9 +		VCC	A31	62		20	GND 35
-	CAV	LOOP DOWN LIMIT	C31	PA1-1 61		19	10
10 +		VCC	A30	60		22	GND 36
-	CAV	AUTO TUNE L/R	C30	PA2-1 59		21	11
11 +		VCC	A29	58		24	GND 37
-		FIRST EVENT A	C29	PA3-1 57		23	12
12 +		VCC	A28	56		26	GND 38
-		FIRST EVENT B	C28	PA4-1 55		25	13
13 +		VCC	A27	54		28	GND 39
-		FIRST EVENT C	C27	PA5-1 53		27	14
14 +		VCC	A26	52		30	GND 40
-		FIRST EVENT D	C26	PA6-1 51		29	15
15 +		VCC	A25	50		32	GND 41
-		ALC L/R	C25	PA7-1 49		31	16
16 +		VCC	A16	32		34	GND 42
-		RF TRIPPED IND	C16	PA0-2 31		33	17
17 +		VCC	A15	30		36	GND 43
-		RING H2O	C15	PA1-2 29		35	18
18 +		VCC	A14	28		38	GND 44
-	CAV		C14	PA2-2 27		37	19
19 +		VCC	A13	26		40	GND 45
-			C13	PA3-2 25		39	20

Digital I/O - Board #20

Digital I/O - Board #6

WIRING CONNECTIONS FOR RF CONTROL

XRF4 VUVRF1

BIT IN #2	SIGNAL NAME	[redacted]		JX PIN #	JJ5 PIN #	[redacted]
		BOARD EDGE		TRANSITION BOARD		CHAMP IN
20 +	VCC	A12	PL -	24	42	GND 48
-		C12	PA4-2	23	41	21
21 +	VCC	A11		22	44	GND 47
-		C11	PA5-2	21	43	22
22 +	VCC	A10		20	46	GND 46
-		C10	PA6-2	19	45	23
23 +	VCC	A09		18	48	GND 49
-		C09	PA7-2	17	47	24
				VCC	50	VCC 50
					49	JUMPER 25

DIGITAL I/O - BOARD #6

WIRING CONNECTIONS FOR RF CONTROL

XRF4 VUVRF1

BIT OUT #		SIGNAL NAME	[redacted]		JX PIN #		JJ8 PIN #	[redacted]
			BOARD EDGE	TRANSITION BOARD				CHAMP IN
0 +	AUTO	TUNE ENABLE	A24	P4	48	J6	J6- 1	1
-		RET	C24	PB0-1	47		2	26
1 +		DIRECTION	A23		46		3	2
-		RET	C23	PB1-1	45		4	27
2 +		SAMPLE	A22		44		5	3
-		RET	C22	PB2-1	43		6	28
3 +		CLOCK ENABLE	A21		42		7	4
-		RET	C21	PB3-1	41		8	29
4 +	ALC	PULSE	A20		40		9	5
-		HEI	C20	PB4-1	39		10	30
5 +		TRIP	A19		38		11	6
-		RET	C19	PB5-1	37		12	31
6 +	FAULT	RESET	A18		36		13	7
-		RET	C18	PB6-1	35		14	32
7 +	RF ON		A17		34		15	8
-		RET	C17	PB7-1	~~32~~ 33		16	33
8 +			A08		16		17	9
-			C08	PB0-2	15		18	34
9 +			A07		14		19	10
-			C07	PB1-2	13		20	35
10 +			A06		12		21	11
-			C06	PB2-2	11		22	36
11 +			A05		10		23	12
-			C05	PB3-2	9		24	37
12 +			A04		8		25	13
-			C04	PB4-2	7		26	38
13 +			A03		6		27	14
-			C03	PB5-2	5		28	39
14 +			A02		4		29	15
-			C02	PB6-2	3		30	40
15 +			A01		2		31	16
-			C01	PB7-2	1		32	41
					CHASSIS		50	JUMPER 50

DIGITAL I/O - BOARD #4

WIRING CONNECTIONS FOR RF CONTROL

XRF4 VUVRF1

BIT OUT #			SIGNAL NAME [redacted]	JX PIN #			JJ7 PIN # [redacted]
			BOARD	TRANSITION BOARD			CHAMP IN
0 +			A24	P5	48	J4 J7- 1	1
-		RET	C24	PB0-1	47	2	26
1 +	3KW	BLOWER ON	A23		46	3	2
-		RET	C23	PB1-1	45	4	27
2 +	3KW	FILAMENT ON	A22		44	5	3
-		RET	C22	PB2-1	43	6	28
3 +	3KW	GRID ON	A21		42	7	4
-		RET	C21	PB3-1	41	8	29
4 +	3KW	PLATE ON	A20		40	9	5
-		RET	C20	PB4-1	39	10	30
5 +	3KW	SCREEN ON	A19		38	11	6
-		RET	C19	PB5-1	37	12	31
6 +			A18		36	13	7
-			C18	PB6-1	35	14	32
7 +			A17		34	15	8
-			C17	PB7-1	33	16	33
8 +	15KW		A06		16	17	9
-			C06	PB0-2	15	18	34
9 +	50KW	BLOWER ON	A07		14	19	10
-		RET	C07	PB1-2	13	20	35
10 +		FIL ON	A06		12	21	11
-		RET	C06	PB2-2	11	22	36
11 +		GRID ON	A05		10	23	12
-		RET	C05	PB3-2	9	24	37
12 +		PLATE ON	A04		8	25	13
-		RET	C04	PB4-2	7	26	38
13 +		SCREEN ON	A03		6	27	14
-		RET	C03	PB5-2	5	28	39
14 +			A02		4	29	15
-			C02	PB6-2	3	30	40
15 +			A01		2	31	16
-			C01	PB7-2	1	32	41
					CHASSIS	50	JUMPER 50

DIGITAL I/O - BOARD #5